Copyright © 2004

Manual for TRX3001

File/Reference	Prepared	Date	Revised by	Revised date	Revision No.	Approved
Manual for TRX3001	TN	08-03-06	TN	08-03-2006	23	PA

Copyright © 2004

List of contents.

1. Technical specifications and introduction.
2. General user instructions.
3. Theory of hardware operation.
4. Basic software programming.
5. Maintenance/adjustment.
6. Mechanics.
7. TRX 3001 Systemboard.
8. TRX 3001 Front unit.
9. TRX 3001 Connection board.
10. TRX 3001B Radioboard.
11. TRX 3001C Radioboard.
12. TRX 3001D Radioboard.
13. TRDX 3001 Option board.

Copyright © 2004

1. Technical specifications and introduction 1-1
1.1 Technical data 1-3
1.2 NIROS TRX3001B 1-4
1.2.1 General 1-4
1.2.2 Transmitter 1-4
1.2.3 Receiver 1-4
1.3 NIROS TRX3001B 125 1-5
1.3.1 General 1-5
1.3.2 Transmitter 1-5
1.3.3 Receiver 1-5
1.4 NIROS TRX3001B 375 1-6
1.4.1 General 1-6
1.4.2 Transmitter 1-6
1.4.3 Receiver 1-6
1.5 NIROS TRX3001C 1-7
1.5.1 General 1-7
1.5.2 Transmitter 1-7
1.5.3 Receiver 1-7
1.6 NIROS TRX3001C 125 1-8
1.6.1 General 1-8
1.6.2 Transmitter 1-8
1.6.3 Receiver 1-8
1.7 NIROS TRX3001C 375 1-9
1.7.1 General 1-9
1.7.2 Transmitter 1-9
1.7.3 Receiver 1-9
1.8 NIROS TRX3001DL 1-10
1.8.1 General 1-10
1.8.2 Transmitter 1-10
1.8.3 Receiver 1-10
1.9 NIROS TRX3001DL 125 1-11
1.9.1 General 1-11
1.9.2 Transmitter 1-11
1.9.3 Receiver 1-11
1.10 NIROS TRX3001DL 375 1-12
1.10.1 General 1-12
1.10.2 Transmitter 1-12
1.10.3 Receiver 1-12
1.11 NIROS TRX3001DH 1-13
1.11.1 General 1-13
1.11.2 Transmitter 1-13
1.11.3 Receiver 1-13
1.12 NIROS TRX3001DH 125 1-14
1.12.1 General 1-14
1.12.2 Transmitter 1-14
1.12.3 Receiver 1-14
1.13 NIROS TRX3001DH 375 1-15
1.13.1 General 1-15
1.13.2 Transmitter 1-15
1.13.3 Receiver 1-15
1.14 Introduction 1-16
1.14.1 Features 1-16
1.14.1.1 Mobile Radio Transceiver 1-16
1.14.1.2 Personal front unit 1-16

Copyright © 2004

1.14.1.3 Extensible Hand microphone 1-16
1.14.2 Installation 1-16
1.14.2.1 Radio compartment 1-16
1.14.2.2 Distributed installation 1-16
1.14.3 Options 1-16
1.14.3.1 Channel spacings 1-16
1.14.3.2 Duplex operation 1-16
1.14.3.3 Data transmission 1-16

2. General user instructions 2-1
2.1 Personal data 2-3
2.1.1 Range of data 2-3
2.1.2 Handling 2-3
2.2 Microphone 2-3
2.2.1 Normal microphone 2-3
2.2.2 Extra microphone 2-3
2.3 Loudspeaker 2-3
2.4 Installation 2-3
2.4.1 Transceiver 2-3
2.4.2 Control panel 2-3
2.4.3 Loudspeaker 2-4
2.4.4 Antenna 2-4

3. Theory of hardware operation 3-1
3.1 Transceiver 3-3
3.1.1 System board 3-3
3.1.1.1 Power supply and reset 3-3
3.1.1.2 Audio handling 3-3
3.1.1.3 Tone signalling 3-3
3.1.1.4 CPU 3-3
3.1.2 Radio board 3-3
3.1.2.1 Power supply 3-3
3.1.2.2 VCO 3-3
3.1.2.3 RF power amplifier 3-3
3.1.2.4 Receiver 3-4
3.1.2.5 First intermediate frequency amplifier 3-4
3.1.2.6 Second intermediate frequency amplifier and detector 3-4
3.1.2.7 Audio power amplifier 3-4
3.2 Control panel 3-4
3.2.1 Connection board 3-4
3.2.1.1 Function 3-4
3.2.1.2 Connections 3-4
3.2.2 Front unit 3-4
3.2.2.1 Function 3-4
3.2.2.2 Display 3-5
3.2.2.3 Keyboard 3-5

4. Basic software programming 4-1

5. Maintenance/adjustment 5-1
5.1 Environmental maintenance 5-3
5.1.1 Troubleshooting 5-3
5.1.2 Adjustments 5-3
5.1.2.1 Microphone sensitivity 5-3
5.2 Calibration 5-3
5.2.1 Entering service mode 5-4
5.2.2 Alignment overview 5-5
5.2.3 Battery low voltage 5-5
5.2.4 Set reference frequency 5-6

Copyright © 2004

5.2.5 Set RF output power 5-7
5.2.6 Calibrate Tx deviation 5-7
5.2.7 Tone system deviation 5-10
5.2.8 Rx level 5-11
5.2.9 Squelch threshold and hysteresis 5-13

6. Mechanics 6-1
6.1 Installation guide 6-3
6.1.1 Radio compartment installation 6-3
6.1.2 Distributed installation 6-3
6.1.3 Electrical installation 6-3
6.1.3.1 Power supply 6-3
6.1.3.2 Connection board 6-3
6.1.3.3 Loudspeaker 6-3
6.1.3.4 Antenna 6-3

7. Systemboard TRX3001 7-1
7.1 Diagram 7-3
7.2 Componentside 7-15
7.3 Wiringside 7-17
7.4 Componentside pin number 7-19
7.5 Wiringside pin number 7-21
7.6 Fieldlist 7-23
7.7 Partlist 7-29

8. Front unit TRX3001 8-1
8.1 Diagram 8-3
8.2 Componentside 8-9
8.3 Wiringside 8-11
8.4 Partlist 8-13

9. Connection board TRX3001 9-1
9.1 Diagram 9-3
9.2 Componentside 9-5
9.3 Partlist 9-7

10. Radioboard TRX3001B 10-1
10.1 Diagram 10-3
10.2 Componentside 10-13
10.3 Wiringside 10-15
10.4 Fieldlist 10-17
10.5 Partlist 10-25

11. Radioboard TRX3001C 11-1
11.1 Diagram 11-3
11.2 Componentside 11-13
11.3 Wiringside 11-15
11.4 Fieldlist 11-17
11.5 Partlist 11-25

12. Radioboard TRX3001D 12-1
12.1 Diagram 12-3
12.2 Componentside 12-13
12.3 Wiringside 12-15
12.4 Fieldlist 12-17
12.5 Partlist 12-25

Copyright © 2004

13. Option board TRDX3001 13-1
13.1 Diagram 13-3
13.2 Componentside 13-11
13.3 Wiringside 13-13
13.4 Connector/Modul port 13-15
13.5 Fieldlist 13-17
13.6 Partlist 13-23

Copyright © 2004

Revision log

Current revision

		Revision No.
	Revision log	23
	List of contents	8
Chapter 1	Technical specifications and introduction	2
Chapter 2	General user instructions	0
Chapter 3	Theory of hardware operation	0
Chapter 4	Basic software programming	0
Chapter 5	Maintenance/adjustment	1
Chapter 6	Mechanics	0
Chapter 7	Systemboard TRX3001	3
Chapter 8	Front unit TRX3001	1
Charger 9	Connection board TRX3001	0
Charger 10	Radioboard TRX3001B	8
Chapter 11	Radioboard TRX3001C	7
Chapter 12	Radioboard TRX3001D	6
Chapter 13	Option board TRDX3001	3

Revision 0 **12-10-1998**
New chapter 11 is added, and “List of contents” is changes to revision 1.
Revision 1 **14-12-1998**
Chapter 10 is changed to revision 1. New PC. Board version.
Chapter 11 is changed to revision 1. New PC. Board version.
Revision 2 **21-09-1999**
New chapter 12 is added, and “List of contents” is changes to revision 2.
Revision 3 **21-01-2000**
Chapter 12 is changed to revision 1. New PC. Board version.
Revision 4 **21-03-2000**
Chapter 12 is changed to revision 2. New PC. Board version.
Revision 5 **16-05-2000**
Chapter 10 is changed to revision 2. New 12,5KHz and switched version.
Chapter 11 is changed to revision 2. New 12,5KHz and switched version.
Chapter 12 is changed to revision 3. New 12,5KHz and switched version.
Revision 6 **03-10-2000**
Chapter 10 is changed to revision 3. New PC. Board version. New Duplex version.
Chapter 11 is changed to revision 3. New PC. Board version. New Duplex version.
Revision 7 **06-11-2000**
New chapter 13 is added, and “List of contents” is changes to revision 3.
Revision 8 **17-11-2000**
Chapter 13 is changed to revision 1. New PC. Board version.
Revision 9 **30-11-2000**
Chapter 5 is changed to revision 1. New Calibration text.
“List of contents” is changes to revision 4.
Revision 10 **06-12-2000**
Chapter 7 is changed to revision 1. New Remote version.
Revision 11 **23-01-2001**
“List of contents” is changes to revision 5.
Chapter 1 is changed to revision 1. New Technical specifications.
Chapter 12 is changed to revision 4. New PC. Board version. New Duplex version.
Revision 12 **06-02-2001**
“List of contents” is changes to revision 6.
Chapter 1 is changed to revision 1. New Technical specifications.
Revision 13 **09-04-2002**
Chapter 13 is changed to revision 2. New GPS version.
Revision 14 **16-08-2002**
Chapter 7 is changed to revision 2. New PC. Board version.
“List of contents” is changes to revision 7.

Copyright © 2004

Revision 15 **21-07-2002**
Chapter 10 is changed to revision 4. New PC. Board version.
Chapter 11 is changed to revision 4. New PC. Board version.
Revision 16 **14-10-2002**
Chapter 13 is changed to revision 3. New PC. Board version.
"List of contents" is changes to revision 8.
Revision 17 **27-08-2002**
Chapter 10 is changed to revision 5. New Diagram version.
Chapter 11 is changed to revision 5. New Diagram version.
Revision 18 **14-01-2003**
Chapter 12 is changed to revision 5. New PC. Board version.
Revision 19 **18-03-2003**
Chapter 10 is changed to revision 6. New Diagram version.
Chapter 11 is changed to revision 6. New Diagram version.
Revision 20 **04-08-2003**
Chapter 10 is changed to revision 7. New PC. Board version.
Chapter 11 is changed to revision 7. New PC. Board version.
Revision 21 **23-08-2004**
Chapter 10 is changed to revision 8. New PC. Board version.
Revision 22 **09-09-2004**
Chapter 7 is changed to revision 3. New Diagram version.
Chapter 8 is changed to revision 1. New partlist.
Revision 23 **08-03-2006**
Chapter 12 is changed to revision 6. New PC. Board version.

Copyright © 2004

1. Technical specifications and introduction

Copyright © 2004

1.1 Technical data

Number of channels:		100 - optional 1000
Antenna impedance:		50 ohms
Supply voltage:		10.8 - 15.6 VDC nom. 13.2 VDC
Temperature range:		-25° C to +55° C
Signalling: CCIR, ZVEI, EEA, CTCSS, DTMF, FFSK and user defined tone systems.		
Physical dimensions:	(WxDxH)	
	Transceiver	175 × 153.3 × 39.4
	Connection board	186 × 25.5 × 58
	Front unit	162.6 × 21.4 × 57.3
Weight:	Transceiver	1250 g
	Connection board incl. bracket	150 g
	Front unit	140 g
Environmental, IP Grade:	Transceiver and control unit: IP50	
RF output power:		1 - 25 W programmable
TX spurious:		Less than -36dBm
Modulation:	Frequency modulation (FM) or Phase modulation (PM).	
AF output power:		4 W / 4 ohm
Microphone sensitivity:		5 mV / 2kohm
Standards:	ETS 300 086, ETS 300 279, ETS 300 219, ETS 300 113	

Copyright © 2004

1.2 NIROS TRX3001B

1.2.1 General

Type designation	TRX3001B
Frequency band	68 –- 88 MHz
Channel spacing	20/25 kHz
RF bandwidth	20 MHz
Mode of operation	Simplex or Semiduplex
Supply current	Standby typ. 190 mA, Receive typ. 1 A, Transmit typ. 5,5 A
Frequency stability	± 3 ppm

1.2.2 Transmitter

RF output power	25W ± 0,7 dB
Adjacent channel power	Better than – 75 dBc
Max frequency deviation	4/5 kHz
AF distortion	2,5%
AF response	300 – 3000 Hz
Hum and noise	Better than – 40 dB

1.2.3 Receiver

EMF sensivity	Better than – 117dBm, 0,32 µV ½ EMK 12 dB SINAD
Adjacent channel rejection	Better than – 75 dB
Spurious and image rejection	Better than – 70 dB
Intermodulation rejection	Better than – 70 dB
AF distortion	Better than 4%
AF response	300 – 3000 Hz
Hum and noise	Better than – 40 dB

Copyright © 2004

1.3 NIROS TRX3001B 125

1.3.1 General

Type designation	TRX3001B 125
Frequency band	68 – 88 MHz
Channel spacing	12,5 kHz
RF bandwidth	20 MHz
Mode of operation	Simplex or Semiduplex
Supply current	Standby typ. 190 mA, Receive typ. 1 A, Transmit typ. 5,5 A
Frequency stability	± 3 ppm

1.3.2 Transmitter

RF output power	25W ± 0,7 dB
Adjacent channel power	Better than – 70 dBc
Max frequency deviation	2,5 kHz
AF distortion	2,5%
AF response	300 – 2550 Hz
Hum and noise	Better than – 40 dB

1.3.3 Receiver

EMF sensivity	Better than – 117dBm, 0,32 µV ½ EMK 12 dB SINAD
Adjacent channel rejection	Better than – 70 dB
Spurious and image rejection	Better than – 70 dB
Intermodulation rejection	Better than – 70 dB
AF distortion	Better than 4%
AF response	300 – 2550 Hz
Hum and noise	Better than – 40 dB

Copyright © 2004

1.4 NIROS TRX3001B 375

1.4.1 General

Type designation	TRX3001B 375
Frequency band	68 – 88 MHz
Channel spacing	25 kHz / 20 kHz / 12,5 kHz
RF bandwidth	20 MHz
Mode of operation	Simplex or Semiduplex
Supply current	Standby typ. 190 mA, Receive typ. 1 A, Transmit typ. 5,5 A
Frequency stability	± 3 ppm

1.4.2 Transmitter

RF output power	25W ± 0,7 dB
Adjacent channel power	Better than – 70 dBc
Max frequency deviation	5 kHz / 4 kHz / 2,5 kHz
AF distortion	2,5%
AF response	300 – 3000 Hz / 300 – 3000 Hz / 300 – 2550 Hz
Hum and noise	Better than – 40 dB

1.4.3 Receiver

EMF sensivity	Better than – 117dBm, 0,32 µV ½ EMK 12 dB SINAD
Adjacent channel rejection	Better than – 70 dB
Spurious and image rejection	Better than – 70 dB
Intermodulation rejection	Better than – 70 dB
AF distortion	Better than 4%
AF response	300 – 3000 Hz / 300 – 3000 Hz / 300 – 2550 Hz
Hum and noise	Better than – 40 dB

Copyright © 2004

1.5 NIROS TRX3001C

1.5.1 General

Type designation	TRX3001C
Frequency band	146 – 174 MHz
Channel spacing	20/25 kHz
RF bandwidth	28 MHz
Mode of operation	Simplex or Semiduplex
Supply current	Standby typ. 190 mA, Receive typ. 1 A, Transmit typ. 6,0 A
Frequency stability	± 3 ppm

1.5.2 Transmitter

RF output power	25W ± 0,7 dB
Adjacent channel power	Better than – 75 dBc
Max frequency deviation	4/5 kHz
AF distortion	2,5%
AF response	300 – 3000 Hz
Hum and noise	Better than – 40 dB

1.5.3 Receiver

EMF sensivity	Better than – 117dBm, 0,32 µV ½ EMK 12 dB SINAD
Adjacent channel rejection	Better than – 75 dB
Spurious and image rejection	Better than – 70 dB
Intermodulation rejection	Better than – 70 dB
AF distortion	Better than 4%
AF response	300 – 3000 Hz
Hum and noise	Better than – 40 dB

Copyright © 2004

1.6 NIROS TRX3001C 125

1.6.1 General

Type designation	TRX3001C 125
Frequency band	146 – 174 MHz
Channel spacing	12,5 kHz
RF bandwidth	28 MHz
Mode of operation	Simplex or Semiduplex
Supply current	Standby typ. 190 mA, Receive typ. 1 A, Transmit typ. 6,0 A
Frequency stability	± 3 ppm

1.6.2 Transmitter

RF output power	25W ± 0,7 dB
Adjacent channel power	Better than – 70 dBc
Max frequency deviation	2,5 kHz
AF distortion	2,5%
AF response	300 – 2550 Hz
Hum and noise	Better than – 40 dB

1.6.3 Receiver

EMF sensivity	Better than – 117dBm, 0,32 µV ½ EMK 12 dB SINAD
Adjacent channel rejection	Better than – 70 dB
Spurious and image rejection	Better than – 70 dB
Intermodulation rejection	Better than – 70 dB
AF distortion	Better than 4%
AF response	300 – 2550 Hz
Hum and noise	Better than – 40 dB

Copyright © 2004

1.7 NIROS TRX3001C 375

1.7.1 General

Type designation	TRX3001C 375
Frequency band	146 – 174 MHz
Channel spacing	25 kHz / 20 kHz / 12,5 kHz
RF bandwidth	28 MHz
Mode of operation	Simplex or Semiduplex
Supply current	Standby typ. 190 mA, Receive typ. 1 A, Transmit typ. 6,0 A
Frequency stability	± 3 ppm

1.7.2 Transmitter

RF output power	25W ± 0,7 dB
Adjacent channel power	Better than – 70 dBc
Max frequency deviation	5 kHz / 4 kHz / 2,5 kHz
AF distortion	2,5%
AF response	300 – 3000 Hz / 300 – 3000 Hz / 300 – 2550 Hz
Hum and noise	Better than – 40 dB

1.7.3 Receiver

EMF sensivity	Better than – 117dBm, 0,32 µV ½ EMK 12 dB SINAD
Adjacent channel rejection	Better than – 70 dB
Spurious and image rejection	Better than – 70 dB
Intermodulation rejection	Better than – 70 dB
AF distortion	Better than 4%
AF response	300 – 3000 Hz / 300 – 3000 Hz / 300 – 2550 Hz
Hum and noise	Better than – 40 dB

Copyright © 2004

1.8 NIROS TRX3001DL

1.8.1 General

Type designation	TRX3001DL
Frequency band	378 – 450 MHz
Channel spacing	20/25 kHz
RF bandwidth	72 MHz
Mode of operation	Simplex or Semiduplex
Supply current	Standby typ. 190 mA, Receive typ. 1 A, Transmit typ. 7,5 A
Frequency stability	± 2 ppm

1.8.2 Transmitter

RF output power	25W ± 0,7 dB 403-450 MHz / 25W ± 1,5 dB 378-403 MHz
Adjacent channel power	Better than – 75 dBc
Max frequency deviation	4/5 kHz
AF distortion	2,5%
AF response	300 – 3000 Hz
Hum and noise	Better than – 40 dB

1.8.3 Receiver

EMF sensivity	Better than – 115dBm, 0,4 µV ½ EMK 12 dB SINAD
Adjacent channel rejection	Better than – 75 dB
Spurious and image rejection	Better than – 75 dB
Intermodulation rejection	Better than – 70 dB
AF distortion	Better than 4%
AF response	300 – 3000 Hz
Hum and noise	Better than – 40 dB

Copyright © 2004

1.9 NIROS TRX3001DL 125

1.9.1 General

Type designation	TRX3001DL 125
Frequency band	378 – 450 MHz
Channel spacing	12,5 kHz
RF bandwidth	72 MHz
Mode of operation	Simplex or Semiduplex
Supply current	Standby typ. 190 mA, Receive typ. 1 A, Transmit typ. 7,5 A
Frequency stability	± 2 ppm

1.9.2 Transmitter

RF output power	25W ± 0,7 dB 403-450 MHz / 25W ± 1,5 dB 378-403 MHz
Adjacent channel power	Better than – 60 dBc
Max frequency deviation	2,5 kHz
AF distortion	2,5%
AF response	300 – 2550 Hz
Hum and noise	Better than – 40 dB

1.9.3 Receiver

EMF sensivity	Better than – 115dBm, 0,4 µV ½ EMK 12 dB SINAD
Adjacent channel rejection	Better than – 60 dB
Spurious and image rejection	Better than – 75 dB
Intermodulation rejection	Better than – 70 dB
AF distortion	Better than 4%
AF response	300 – 2550 Hz
Hum and noise	Better than – 40 dB

Copyright © 2004

1.10 NIROS TRX3001DL 375

1.10.1 General

Type designation	TRX3001DL 375
Frequency band	378 – 450 MHz
Channel spacing	25 kHz / 20 kHz /12,5 kHz
RF bandwidth	72 MHz
Mode of operation	Simplex or Semiduplex
Supply current	Standby typ. 190 mA, Receive typ. 1 A, Transmit typ. 7,5 A
Frequency stability	± 2 ppm

1.10.2 Transmitter

RF output power	25W ± 0,7 dB 403-450 MHz / 25W ± 1,5 dB 378-403 MHz
Adjacent channel power	Better than – 70 dBc
Max frequency deviation	5 kHz / 4 kHz /2,5 kHz
AF distortion	2,5%
AF response	300 – 3000 Hz / 300 – 3000 Hz / 300 – 2550 Hz
Hum and noise	Better than – 40 dB

1.10.3 Receiver

EMF sensivity	Better than – 115dBm, 0,4 µV ½ EMK 12 dB SINAD
Adjacent channel rejection	Better than – 70 dB / – 70 dB / – 60 dB
Spurious and image rejection	Better than – 75 dB
Intermodulation rejection	Better than – 70 dB
AF distortion	Better than 4%
AF response	300 – 3000 Hz / 300 – 3000 Hz / 300 – 2550 Hz
Hum and noise	Better than – 40 dB

Copyright © 2004

1.11 NIROS TRX3001DH

1.11.1 General

Type designation	TRX3001DH
Frequency band	430 – 470 MHz
Channel spacing	20/25 kHz
RF bandwidth	40 MHz
Mode of operation	Simplex or Semiduplex
Supply current	Standby typ. 190 mA, Receive typ. 1 A, Transmit typ. 7,5 A
Frequency stability	± 2 ppm

1.11.2 Transmitter

RF output power	25W ± 0,7 dB
Adjacent channel power	Better than – 75 dBc
Max frequency deviation	4/5 kHz
AF distortion	2,5%
AF response	300 – 3000 Hz
Hum and noise	Better than – 40 dB

1.11.3 Receiver

EMF sensivity	Better than – 115dBm, 0,4 µV ½ EMK 12 dB SINAD
Adjacent channel rejection	Better than – 75 dB
Spurious and image rejection	Better than – 70 dB
Intermodulation rejection	Better than – 70 dB
AF distortion	Better than 4%
AF response	300 – 3000 Hz
Hum and noise	Better than – 40 dB

Copyright © 2004

1.12 NIROS TRX3001DH 125

1.12.1 General

Type designation	TRX3001DH 125
Frequency band	430 – 470 MHz
Channel spacing	12,5 kHz
RF bandwidth	40 MHz
Mode of operation	Simplex or Semiduplex
Supply current	Standby typ. 190 mA, Receive typ. 1 A, Transmit typ. 7,5 A
Frequency stability	± 2 ppm

1.12.2 Transmitter

RF output power	25W ± 0,7 dB
Adjacent channel power	Better than – 60 dBc
Max frequency deviation	2,5 kHz
AF distortion	2,5%
AF response	300 – 2550 Hz
Hum and noise	Better than – 40 dB

1.12.3 Receiver

EMF sensivity	Better than – 115dBm, 0,4 µV ½ EMK 12 dB SINAD
Adjacent channel rejection	Better than – 60 dB
Spurious and image rejection	Better than – 70 dB
Intermodulation rejection	Better than – 70 dB
AF distortion	Better than 4%
AF response	300 – 2550 Hz
Hum and noise	Better than – 40 dB

Copyright © 2004

1.13 NIROS TRX3001DH 375

1.13.1 General

Type designation	TRX3001DH 375
Frequency band	430 – 470 MHz
Channel spacing	25 kHz / 20 kHz / 12,5 kHz
RF bandwidth	40 MHz
Mode of operation	Simplex or Semiduplex
Supply current	Standby typ. 190 mA, Receive typ. 1 A, Transmit typ. 7,5 A
Frequency stability	± 2 ppm

1.13.2 Transmitter

RF output power	25W ± 0,7 dB
Adjacent channel power	Better than – 70 dBc
Max frequency deviation	5 kHz / 4 kHz / 2,5 kHz
AF distortion	2,5%
AF response	300 – 3000 Hz / 300 – 3000 Hz / 300 – 2550 Hz
Hum and noise	Better than – 40 dB

1.13.3 Receiver

EMF sensivity	Better than – 115dBm, 0,4 µV ½ EMK 12 dB SINAD
Adjacent channel rejection	Better than – 70 dB / – 70 dB / – 60 dB
Spurious and image rejection	Better than – 70 dB
Intermodulation rejection	Better than – 70 dB
AF distortion	Better than 4%
AF response	300 – 3000 Hz / 300 – 3000 Hz / 300 – 2550 Hz
Hum and noise	Better than – 40 dB

Copyright © 2004

1.14 Introduction

1.14.1 Features

1.14.1.1 Mobile Radio Transceiver

TRX3001 is a mobile radio transceiver intended primarily for fitting into vehicles. It can be used for both voice and (optionally) data applications.

1.14.1.2 Personal front unit

The control panel is made from a connection board and a removable personal front unit. TRX3001 is fully programmable and in addition personal data can be stored in the front unit.

1.14.1.3 Extensible Hand microphone

The microphone may be used either directly from the radio or from the connection unit. It is possible to install the microphone up to 10 m away from the radio.

1.14.2 Installation

1.14.2.1 Radio compartment

The control panel may be attached to the transceiver and the combined apparatus placed in the radio compartment using an installation kit.

1.14.2.2 Distributed installation

The transceiver may also be placed almost anywhere inside the vehicle. Avoid places with a high temperature risk like the engine room or with direct exposure to the sun. The control panel shall be fixed to the vehicle in a convenient place for the operator. A hinged fixture may be used.

1.14.3 Options

1.14.3.1 Channel spacings

TRX3001 may be supplied with individually programmable channel spacings for each channel. The available channel spacings are 25 kHz, 20 kHz and 12.5 kHz.

1.14.3.2 Duplex operation

TRX3001 can easily be programmed with individual offsets between receiving and transmitting frequency for each channel. Duplex operation with an external duplex filter is under consideration.

1.14.3.3 Data transmission

TRX3001 is planned for data transmission.

Copyright © 2004

2. General user instructions

Copyright © 2004

2.1 Personal data

Personal data may be programmed in the front unit. The front unit is removable so each operator may have his own front unit which he brings with him into the vehicle. This makes ID numbers available on a personal basis and not associated with a specific vehicle.

2.1.1 Range of data

The basic channel data with information about frequency, tone systems and handshake are stored in the transceiver.

Data stored in the front unit are as follows:

- Default channel
- ID number

2.1.2 Handling

The front unit is inserted in the connection panel. It is removed by pressing the plastic retainer and stored together with other personal items.

2.2 Microphone

2.2.1 Normal microphone

The normal handmicrophone is inserted in the connection panel using a flexible cord. The length of the cord is approximately 1.5 m when stretched. If this is not sufficient it may be extended with an extra length up to 5 m.

2.2.2 Extra microphone

An extra microphone may be connected to the transceiver and used in parallel with the normal. Request for transmission is executed no matter what origin.

2.3 Loudspeaker

The loudspeaker shall be 4 ohm or more. The audio power delivered from the transceiver is 4 watt into 4 ohm. The loudspeaker should be installed to produce the best sound level possible.

2.4 Installation

2.4.1 Transceiver

You can choose between two different installations. Either together with the control panel in the radio compartment, or seperately somewhere in the vehicle. In the latter case the control panel must be mounted in a convenient place for the operator. See section 6 for further details.

2.4.2 Control panel

The control panel may be placed in the radio compartment together with the transceiver. It has dimensions according to the standard ISO 7736. An installation kit is available. It may also be fixed at any other

Copyright © 2004

conveniet place. The control panel is connected to the transceiver by a flatcable with Bell connectors. The length of this cable may be up to 10 m if the transceiver is located far from the control panel.

2.4.3 Loudspeaker

The loudspeaker shall have an impedance of 4 -16 ohms. It should be placed in such a way that the sound level for the operator is as high as possible. The cable length is not critical, but the cross section of each wire in the cable should be at least 0.75 mm^2.

2.4.4 Antenna

The antenna should be placed on top of the vehicle to acheive best transmission performance. Use a quarter wavelength whip antenna for the 4 m radio. The cable length between antenna and transceiver is not critical, but should not exceed 4 m if a standard coax RG58 is used. If a longer cable is necessary, use RG 213 cable or similar.

Copyright © 2004

3. Theory of hardware operation

Copyright © 2004

3.1 Transceiver

3.1.1 System board

3.1.1.1 Power supply and reset

The power for the system board is taken from the radio board through connector JR1. A permanent +12 V and a switched +12 V is supplied. From these the rest of the voltages are produced using fixed regulators: +8V: IC210, +5V: IC202, +5V(SW): T205A and +5V(AF) from T205 too. The reset circuitry is shown on drawing no 0-3002-03-2 page 2.

3.1.1.2 Audio handling

Audio routing and signalling is digitally controlled and confined to the system board. The microphone inputs are RF-filtered and amplified and then presented to IC304. Tone signalling and audio is summed, filtered, limited and used to modulate the transmitter. The audio circuitry is shown on drawing no 0-3002-03-2 page 3.

3.1.1.3 Tone signalling

IC305 is the audio signalling processor to make and detect selective calls using in-band signalling. IC303 does the sub-band signalling according to CTCSS. IC301 is an optional modem processor for data transmission.

3.1.1.4 CPU

TRX3001 is controlled by a 16 bit mP operating with an 8 bit external data bus. The clock frequency is 16 MHz. The CPU circuitry is shown on drawing no 0-3002-03-2 page 1.

3.1.2 Radio board

3.1.2.1 Power supply

Power from the vehicles battery is supplied directly to the radio board. The voltage must be between 10.8 V and 15.6V. The input is protected with a 12 A fuse and a suppressor diode D501. The voltage is then filtered by chokes F501 in parallel with F502 and a capacitor C506. From this +12 V is produced a switched voltage +12 V(SW) and a linear regulator IC501 makes a local +7.2 V. +5 V is supplied from the system board.

3.1.2.2 VCO

TRX3001 operates with two VCO's simultaneously. One is used for the transmitter and the other for the receiver with an upper local oscillator frequency. The TX-VCO is shown on drawing 0-3000-03-3 page 2 and is controlled by a PLL IC206. The RX-VCO is shown on the same drawing, page 3, and is controlled by a PLL IC301.

3.1.2.3 RF power amplifier

The signal from the TX-VCO is buffered in T204 and amplified in T101 and T104 before it is presented to the PA stage IC101. Output from IC101 is filtered in a three stage elliptical filter (7 poles) and connected to the antenna terminal. The RF output is monitored in D104 and the rectified voltage is compared with the signal TX PWR and used as feed-back to the driver transistor T104 and the control voltage for IC101. The maximum RF power is 25 W, and the minimum is 1 W. The RF power amplifier is shown on drawing 0-3000-03-3 page 1.

Copyright © 2004

3.1.2.4 Receiver

The RF input signal goes through the same low-pass filter as the RF output signal and is then by means of a couple of PIN diodes diverted to the RX frontend. It is filtered in two double bandpass filters with an amplification in T401 between. It is then mixed in a double balanced mixer with diodes D410. The receiver circuit is shown on drawing 0-3000-03-3 page 4.

3.1.2.5 First intermediate frequency amplifier

The first intermediate frequency of 45 MHz is buffered in T405 and passed through a four pole X-tal filter. TRX3001 has as an option two parallel X-tal filters which may be switched by means of a set of PIN diodes. In this way you can select channel spacings individually for each channel. The first intermediate frequency amplifier is shown on drawing 0-3000-03-3 page 4.

3.1.2.6 Second intermediate frequency amplifier and detector

The filtered 45 MHz IF is amplified in T504 and mixed in IC502 with a 44.55 MHz to produce the 2nd IF of 450 kHz. IC502 takes care of the rest of the amplification and the filtering according to the final channel spacing. The squelch function is made in IC502 too. The recovered audio signal is routed to the system board to be processed by the audio processors here. The 2nd intermediate frequency amplifier is shown on drawing 0-3000-03-3 page 5.

3.1.2.7 Audio power amplifier

The audio power amplifier is a single chip IC102. The output goes thropugh a filter F101 to the external connector J3, where the external loudspeaker is to be connected. It is also routed back to the system board to be used in the hand microphones. The audio power amplifier is shown on drawing 0-3000-03-3 page 1.

3.2 Control panel

3.2.1 Connection board

3.2.1.1 Function

As the name implies, the connection board is used to distribute signals from the transceiver. In addition it amplifies the microphone signal and adjusts the level.

3.2.1.2 Connections

An eight wire flat cable is used between the connection board and the transceiver. It carries both digital signals and the amplified analogue microphone signal.
The front unit is situated directly on top of the connection board. Contact is made with gold plated pads on the front unit and gold plated springs on the connection board.
The hand microphone is connected with an eight pin Bell (modular) connector carrying power supply, PTT switch and auxiliary switches, and the microphone signal.

3.2.2 Front unit

3.2.2.1 Function

The front unit is the controlling interface between operator and the transceiver. It has got keys to input data, a display to output messages from the system and storage for all personal data used to customise the radio.

Copyright © 2004

3.2.2.2 Display

The display is an LCD dot matrix display. It is driven by two separate display controllers IC 201 and IC202, which are controlled by a local microprocessor IC103. At low temperatures the display is heated to enable correct operation down to -25 ^{o}C.

3.2.2.3 Keyboard

The keybord has got 10 decimal keys and '*', '#' arranged in a standard ITU pattern. The remaining 8 keys are used for ON/OFF, ALARM and 6 special function keys. Four of these are used as soft keys where the function is shown in the display directly above the keys.

Copyright © 2004

4. Basic software programming

Copyright © 2004

5. Maintenance/adjustment

Copyright © 2004

5.1 Environmental maintenance

5.1.1 Troubleshooting

The following points should be controlled in case of trouble:

- power supply: have the fuses blown? Check first external, then internal fuse.
- connection cables: are the connectors firmly fixed and the cables connected?
- are the cables damaged?

if not, return to supplier for service.

5.1.2 Adjustments

There are almost no adjustments to be made, but different microphones have different sensitivities.

5.1.2.1 Microphone sensitivity

The microphone sensitivity may be adjusted on the connection board. Establish a connection with another radio and adjust the sensitivity until it is just large enough. Too high sensitivity will not bring better sound, but the background noise will be amplified and transmitted.

5.2 Calibration

The following data shall be calibrated in a TRX 3001 radio:

- Frequency
- RF power
- Audio deviation
- Tone signalling deviation
- Squelch level
- Audio receiver level
- Battery warning level

To do this you need the following equipment:

- Test box (LF, Mic.). NIROS No. N3090
- DC power supply. 13.2 V / 10 A
- DC current meter.
- DC volt meter.
- Radio test setup. Stabilock, Marconi, etc.
- Test cable with TNC male.
- Test cables with BNC male.

To calibrate the radio you must bring it into what is termed **'service mode'**. .This mode is protected against unwanted intrusion by a certain access method and a code. The service mode is menu driven to guide you to the various alignment procedures. If you have changed the calibration data you must store these explicitly in the calibration menu before you leave the service mode. You will be prompted with a ' **Sto** ' command to do this and the sequence is ' **Sto** ', ' **Yes** '. If you do not store, the new data are lost when you leave the service mode.

You will see more menus in the radio than explained here. They are not used for normal calibration, so do not use them.

Any time you can change settings with 'B' or 'A' softkeys, you may just as well use the turnswitch

Copyright © 2004

(volume control) on the front. Turn clockwise to increase and anticlockwise to decrease settings.
Values stated in adjustment tables are guideline values.

5.2.1 Entering service mode

Turn off the radio and then back on.

The radio normally display the sign on message for about 3 seconds and DEFORE this message disappear, press and hold BOTH the ON/OFF and the RED ALARM bottom.

When the display change release both bottom and the display shows :



FileName : The name of the current user configuration file programmed to the radio
User : The ID code/license for PC program that programmed the radio.
BBBB : The build number for the firmware.
DDMMYY : Date stamp for the firmware.
FFFF : SW version for control unit.

Enter the code '**10011704**' followed by "↵" . The radio has now entered service mode. The display shows the main menu, the two text lines are shown:



At this point the radio is in service mode with the user configuration active, meaning the user defined channels, tonesystem and other settings is active, and this may conflict the calibration process.
To achieve this problem a build in test configuration and setup should be selected. This will enable/disable all relevant functions and selecting a set of test channels, tonesekvenses etc..

IT IS IMPORTANT TO INITIATE THE TEST SETUP IF YOU WANT TO CALIBRATE THE RADIO.

Press "**S**" to activate the test set-up. You get the following display:



The current test frequency is taken from the test program which has three predefined frequencies: the lowest, one in the middle and the highest. The transmit frequencies are on the exact frequencies, whereas the receive frequencies are offset 100 kHz upwards. The test frequency is selected with the ' **CH+** ' key, the number increases.

Example:

Channel	TX [MHz]	RX [MHz]
CH 1	146.000	146.100
CH 2	160.000	160.100
CH 3	174.000	174.100

The loudspeaker may be switched on and off using "**LS**". The "**LS**" symbol toggles.
SQ may be switched ON and Off using "**3**".
High, medium and low RF power may be selected using "**2**"

5.2.2 Alignment overview

In the main menu you press ' **Cal** ':



If you press ' **Def** ', you reset the radio to default parameters. It may not be completely correct, but it will be workable. To continue with the calibration you press ' **Adj** ' and get the ' **ADJ Cal** ' menu:



Menu	Sub-menu	Function
D/A	Sq	Squelch threshold and hysteresis
	Pa	H, M, L RF output power
	Ref	Frequency of reference oscillator
A/D	BAT	Low bat. voltage
Af	Rx	AF output level
	Tx	Tx modulation
	Ton	Tone system modulation

A standard sequence of alignment is:

- Battery low voltage
- Reference frequency
- RF power
- Tx deviation
- Tone system deviation if applicable
- Rx level
- Squelch threshold and hysteresis

Battery low and reference frequency shall only be performed if all data has been lost. On the other hand, these values are important before any other calibration is performed.

5.2.3 Battery low voltage

The value is predefined relative to 13.2 V, so the calibration is done by supplying the radio with exact 13.2 V and storing the measured value.

- Place the radio in service mode
- Select ' **Cal** ' for calibration
- Select ' **Adj** ' for adjustment
- Select ' **A/D** ' to get access to the A/D converter

You have now the following display:

Copyright © 2004

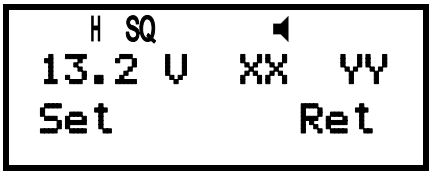

Vin = 13.2 V ± 0.1 V

Adjust the external supply voltage to 13.2 V ± 0.1 V measured at the power connector. ' **YY** ' shows the current voltage in hex format, ' **XX** ' shows the stored value. Check that ' **YY** ' changes when the voltage is adjusted. Select ' **Set** ' to store battery level and see that ' **XX** ' is changed to the ' **YY** ' value. Return to ' **ADJ Cal** ' menu. To be sure to keep data, press ' **END** ' and store data with ' **Sto** ' and ' **Yes** ':



If you want to stop, press ' **END** '. Else continue with ' **Adj** ' to adjust a new parameter.

5.2.4 Set reference frequency

Connect the RF output to a frequency counter. Either the counter shall be able to withstand the full RF power, or the output must be attenuated before the counter. Select low RF power as this minimizes the heating effects. You do it with the "**2**" key. It is assumed that you start in the ' **ADJ Cal** ' menu:



Select ' **D/A** '



Select ' **Ref** '

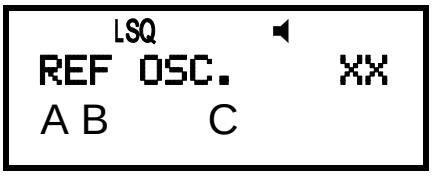

Adjust with 'A' and 'B' until the frequency on the counter shows the nominal Tx frequency. See that the ' **XX** ' value changes. Return to ' **ADJ Cal** ' menu. To be sure to keep data, press ' **END** ' and store data with ' **Sto** ' and ' **Yes** ':



If you want to stop, press ' **END** '. Else continue with another parameter.

5.2.5 Set RF output power

Connect the radio to a power meter. Select the middle channel. It is assumed that you start in the ' **ADJ Cal** ' menu:



Select ' **D/A** '



Select ' **Pa** '

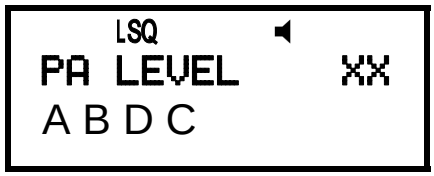

The PA level shall be adjusted to the High, Medium and Low power setting. Adjust the PA level with 'A' and 'B' until the reading is correct. The value ' **XX** ' shows the hex internal data and changes during the adjustment. Select 'D' and get the display:

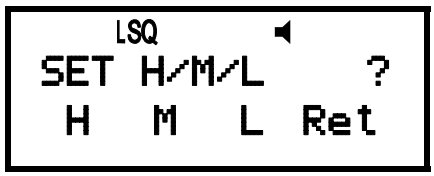

	2M/4M	DL			DH		
Power		**CH1**	**CH2**	**CH3**	**CH1**	**CH2**	**CH3**
H = High	23-30W	16-30W	22-30W	21-30W	21-30W	22-30W	21-30W
M = Medium	8-13W	8-13W	8-13W	8-13W	8-13W	8-13W	8-13W
L = Low	0,7-1,4W	0,7-1,4W	0,7-1,4W	0,7-1,4W	0,7-1,4W	0,7-14W	0,7-1,4W

The actual level will be stored in the selected position, and the radio returns to a new adjustment. Press ' **Ret** ' if you are unsure of the wanted setting, or the value is wrong. When the measurements are finished, press 'C' in the adjustment menu. Return to the ' **ADJ Cal** ' menu. To be sure to keep data, press ' **END** ' and store data with ' **Sto** ' and ' **Yes** '.

5.2.6 Calibrate Tx deviation

Select ' **L** ' (Low power) using "**2**" as this minimizes the heating effects.
The deviation sensitivity varies across the frequency band so the deviation must be calibrated at the lowest and the highest frequency. Select CH1 in the main menu and return to the ' **ADJ Cal** ' menu:

Copyright © 2004



Select ' **Af** ':



Select ' **Tx** ':



The selection of phase or frequency modulation is made automatically. It shall only be changed in very specific circumstances where you want to verify the calibration.
The limiting circuit in the radio has a hard limiter and a soft limiter. First you must adjust the hard limiter with a high level signal to the maximum allowed deviation. After this, you must adjust the deviation level with a nominal input signal level to a deviation of 60% of maximum allowed deviation. The soft limiter works with a peak detector and adjusts the gain to avoid continuous distortion. To set the hard limiter, the peak detector must be switched off.

Select ' **Pk** ':



Set peak detector ' **Off** '. The menu returns automatically. Select ' **Nxt** ' and get:



Select ' **Mod** ' and in the next menu always select "**1**". "**2**" is not used!



The sequence of channels is important. Start with the lowest frequency. Select ' **Ch** ' and select the lowest frequency using ' **Ch-** ' and ' **Ch+** ' The channel number is shown in ' **CC** ' and shall read ' **01** '. Select ' **Mod** ' and select ' **Yes** ' to align the VCO at base offset. Select ' **Ret** ':



If not done before, now is the time to connect the modulation signal and the deviation meter. The modulation input signal shall be set at 1 kHz and 50 mV. The output impedance of the generator must be less than 10 ohm or you must measure the level. Select ' **Lev** ':

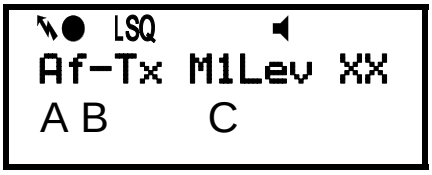

Channel spacing	Deviation
12.5 kHz	2.2 - 2.5 kHz
25 kHz	4.5 - 5.0 kHz

Adjust the deviation with 'A' and 'B' until the deviation is just below the maximum allowed deviation. ' **XX** ' shows the internal calibration value in the range 00 – 1F. Select 'C' and return to the **LEVEL/OFFS**' menu. Select ' **Ch** ' and adjust the channel to the highest frequency (03). Return with ' **Ret** ' to the **LEVEL/OFFS**' menu. Select ' **Off** ':

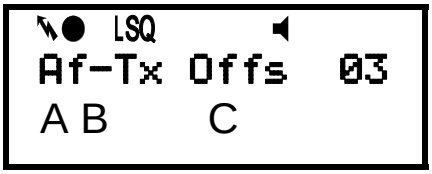

Adjust deviation with 'A' and 'B' until the deviation is just below the maximum allowed deviation. Return with 'C' to the **LEVEL/OFFS**' menu. Press ' **Ret** ' again 3 times until the following menu appears:



Adjust the modulation signal to 5 mV. Select ' **Tx** ' and enable peak detector with ' **Pk** ' and ' **On** '. Press ' **Nxt** '. Select ' **Inp** ':

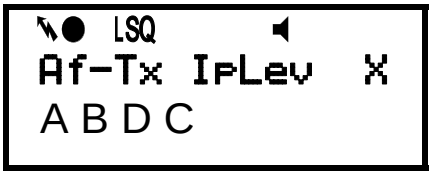

Channel spacing	Deviation 5mV	Deviation 50mV peak on
12.5 kHz	1.35 - 1.65 kHz	1.65 - 2.25 kHz
25 kHz	2.7 - 3.3 kHz	3.3 - 4.5 kHz

Adjust the deviation with 'A', 'B' keys to obtain 60% of maximum allowed deviation. ' **X** ' shows the internal data with a value between 0 and F. Increase input signal to 50 mV and check that modulation is between 65 and 90% of maximum allowed deviation. Select 'C' and ' **Ret** ' until you reach the the ' **ADJ Cal** ' menu. Select ' **END** ' and store data with ' **Sto** ' and ' **Yes** ':

Copyright © 2004



If you want to stop, press ' **END** '. Else continue with another parameter.

5.2.7 Tone system deviation

When the speech deviation is calibrated the basic modulation sensitivity is found. The tone deviation may then be adjusted. You start in the ' **ADJ Cal** ' menu:



Select ' **Af** ':



Select ' **Ton** ':



Select tone modulation as ' **FM** ' or ' **PM** '. See what is defined in the user program. **FM** is normally used.



Select ' **1k** ' and the transmitter starts automatically with a 1 kHz modulation tone.

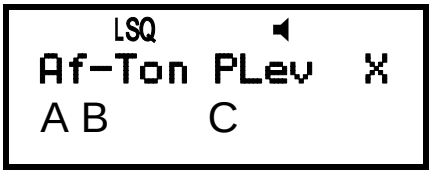

Channel spacing	FM	PM
12.5 kHz	1.4 - 1.75 kHz	0.85 - 1.0 kHz
25 kHz	2.8 - 3.5 kHz	1.7 - 2.0 kHz

Adjust with 'A', 'B' until deviation is as shown in the above table. Select 'C'. Select ' **Ret** ' until this menu appears:



To adjust CTCSS, select ' **Ton** ' and ' **Ctc** ':



Select ' **150** ' to adjust the modulation of the 150 Hz tone:

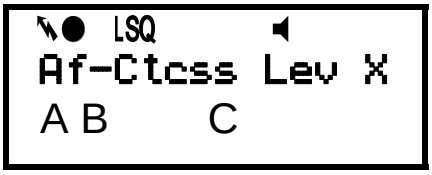

Channel spacing	FM	PM
12.5 kHz	0.35 - 0.45 kHz	0.35 - 0.45 kHz
25 kHz	0.65 - 0.85 kHz	0.65 - 0.85 kHz

Adjust the deviation according to the above table. Press 'C'. When you have selected a CTCSS frequency, the receiver is activated to detect the same and open the loudspeaker. In this way it is possible to check the correct function of the receiving CTCSS system.
To return to the ' **ADJ Cal** ' menu, select ' **Ret** ' and ' **Ret** ' to obtain:



To be sure to keep data, press ' **END** ' and store data with ' **Sto** ' and ' **Yes** ':



If you want to stop, press ' **END** '. Else continue with another parameter.

5.2.8 Rx level

The received audio is adjusted to produce maximum output level when the deviation is maximum. The necessary test equipment is an RF generator with modulation, with the following settings:

RF frequency	one of the test frequencies
RF level	-50 dBm
AF modulation freq.	1 kHz
Deviation	1.65 kHz @ 25 kHz channel spacing, 1 kHz @12.5 kHz

Copyright © 2004

The speaker microphone should not be connected to the control unit. Connect the test box to the LS-output, and connect the LS signal to an AC voltmeter.



Ensure that the LS symbol is present. If not, press the key with the loudspeaker symbol.

Go to the ' **ADJ Cal** ' menu: press ' **CAL** ', ' **Adj** '.



Select ' **Af** ':



Select ' **Rx** ' and turn the volume control to maximum level.



Select ' **Nxt** '. ' **P/F** ' is chosen automatically.



The ' **Pro** ' parameter should not be changed. It determines the processor global gain. The default value is 5.

Select ' **Inp** '. Adjust the output level until the loudspeaker voltage is 3.8 V. The distortion shall be less than 10%, which means that it shall not be clipped:

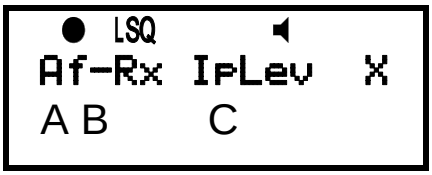

3.5 – 4.1 V

Return with 'C', 'Ret' and ' **Ret** ' to the ' **ADJ Cal** ' menu. If you want to calibrate other data you may do this, or Select ' **END** ' and store data with ' **Sto** ' and ' **Yes** ':

Copyright © 2004



If you want to stop, press ' **END** '. Else continue with another parameter.

5.2.9 Squelch threshold and hysteresis

Connect an RF generator, set at an RF test frequency, modulated with 1 kHz, and a deviation of 1.5 kHz at 12.5 kHz channel spacing, 3 kHz at 25 kHz channel spacing.. Enable the loudspeaker with the "**LS**" key if necessary. Enable SQ (if not enabled, press "**3**").



Select ' **D/A** ' and get:



Select ' **Sq** '.



Closing point to Ref. level	-3.7 - -2.3 dB
Opening point to closing point	+1.0 - +2.0 dB

Adjust the RF level until you obtain a SINAD of 12 dB. This is the reference level. Select ' **Lev** ' and set it to '99'. A higher value means a lower RF level for the squelch setting.

Select ' **Hys** ' and set it at '**16**'. A higher value means a larger hysteresis. Do a squelch measurement: Start above the reference level and decrease the value until the squelch closes. Closing point should be appr. –3 dB below the reference level. Increase the RF signal again until the squelch opens. This level should be appr. 1.5 dB above the closing point.

If the limit values shown above are not correct, you must adjust the settings. Remember that a higher squelch **Lev**el value means a lower closing point, and a higher squelch **Hys**teresis value means a larger squelch hysteresis.

Return to store and exit.

Copyright © 2004

6. Mechanics

Copyright © 2004

6.1 Installation guide

The TRX3001 system may be installed either as a single unit in the radio compartment or with the transceiver hidden somewhere and the control panel situated at an appropriate place.

6.1.1 Radio compartment installation

Use a mounting kit no. 9239 to fix the TRX3001 system in the radio compartment with the control panel (connection board with front unit) attached. The hand microphone is connected in the front and may be fixed in a holder near by.

6.1.2 Distributed installation

The transceiver is placed somewhere in the vehicle where the temperature does not exceed 55 ^{0}C. The front panel may be fixed at a convenient site, eventually using a hinged fixture.

6.1.3 Electrical installation

6.1.3.1 Power supply

The supply voltage for the is taken from the car battery, 12 V nominal voltage, through a 10 Amp fast fuse in the positive lead (red). The standard supply wires may be extended with wires of an appropriate cross-section. The relationship between wire length and cross-section can be seen in the table below.
The user controlled +12 V output and the alarm output should be disconnected in the connector if they are not to be used.

Wire length	0 - 2 m	2 - 4 m	4 - 8 m	8 - 12 m	12 - 18 m
Dimension [mm^2]	2.5	4	6	10	16

6.1.3.2 Connection board

The connection board is connected to the transceiver by a flatcable with Bell connectors. The length of this cable may be up to 10 m if the transceiver is located far from the connection board.
The front unit is clicked onto the connection board and may be removed by pressing the plastic retainer.

6.1.3.3 Loudspeaker

The loudspeaker should have an impedance of 4 - 16 ohms. It should be placed in such a way that the sound level from the loudspeaker is as high as possible where it is to be used. The cable length is not critical, but the cross section of each wire in the cable should be at least 0.75 mm^2.

6.1.3.4 Antenna

The antenna shall be intended for use in the wanted frequency range. It shall be connected to the transceiver using a 50 ohm coax cable. The antenna should be placed on top of the vehicle to acheive best transmission performance. Use a quarter wavelength whip antenna for the 4 m radio. The cablelength between antenna and transceiver is not critical, but should not exceed 4 m if a standard coax RG58 is used. If a longer cable is necessary, use RG 213 cable or similar.

Copyright © 2004

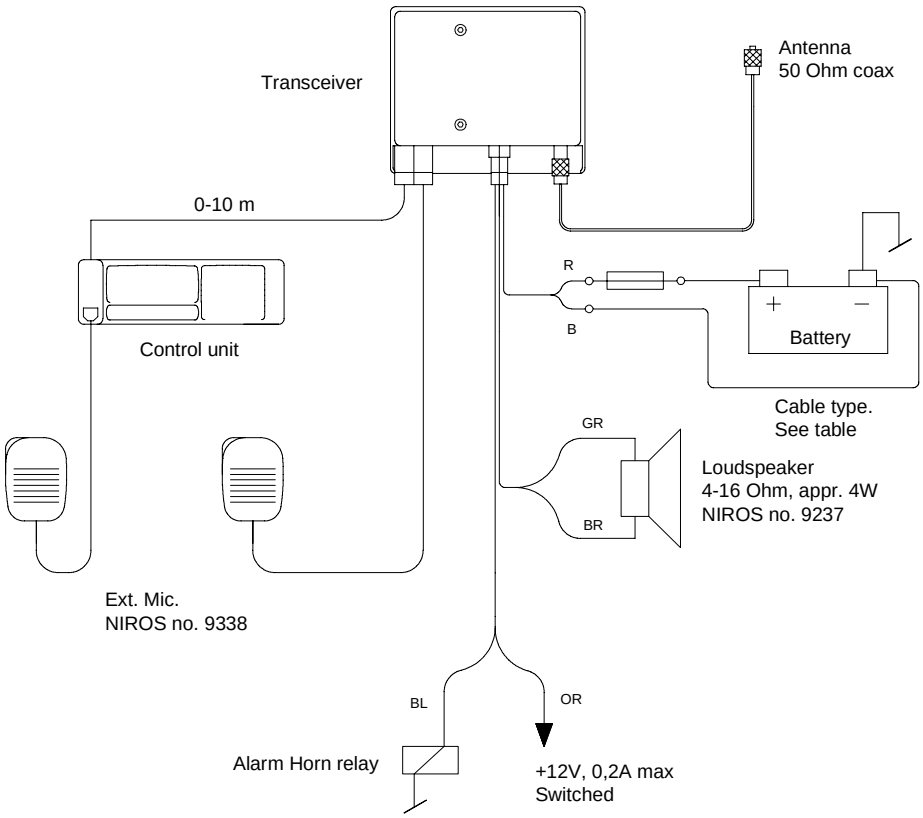

(Installation schematic)

Copyright © 2004

7. Systemboard TRX3001

Copyright © 2004

7.1 Diagram

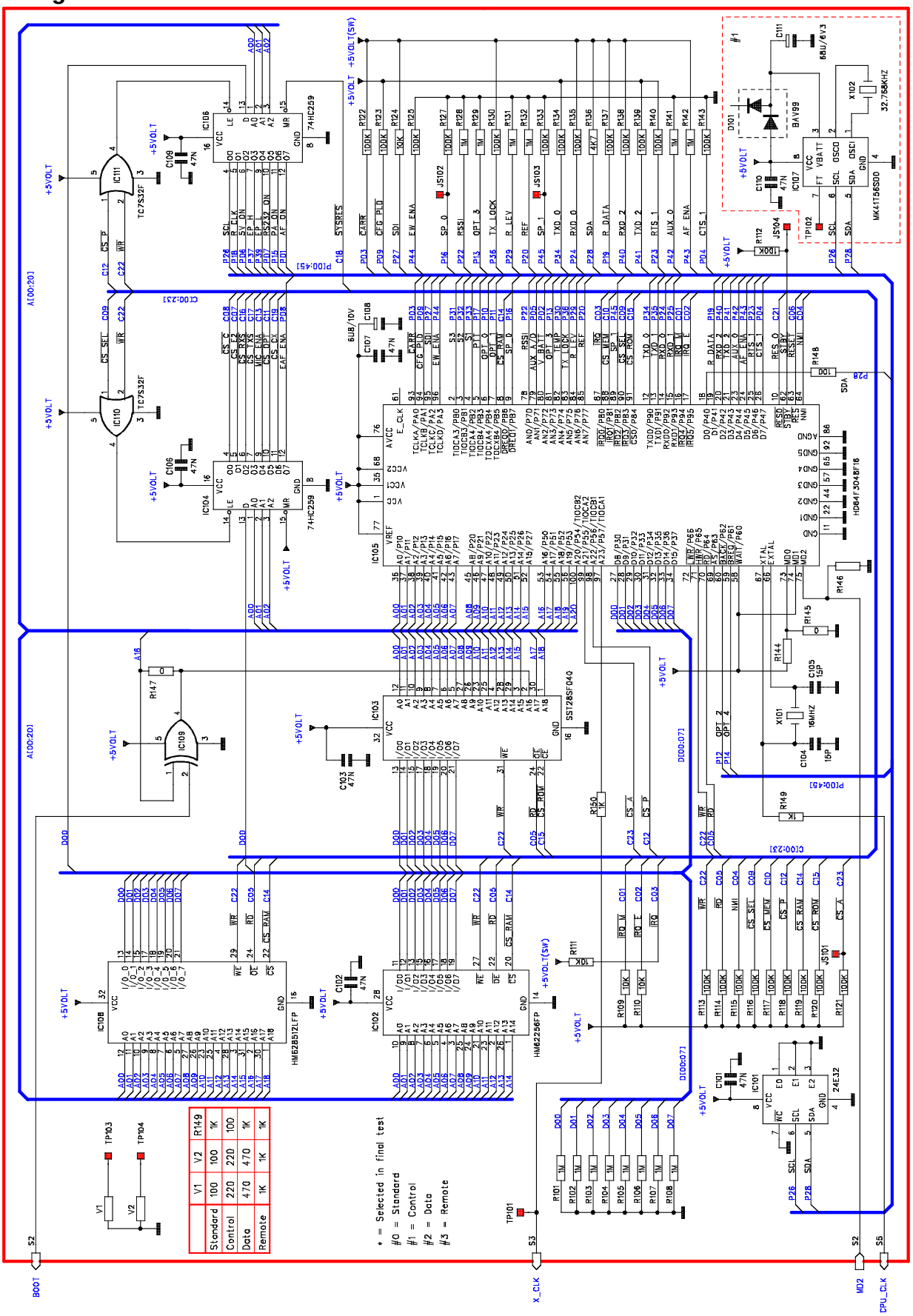

	V1	V2	R149
Standard	100	100	1K
Control	220	220	100
Data	470	470	1K
Remote	1K	1K	1K

Copyright © 2004

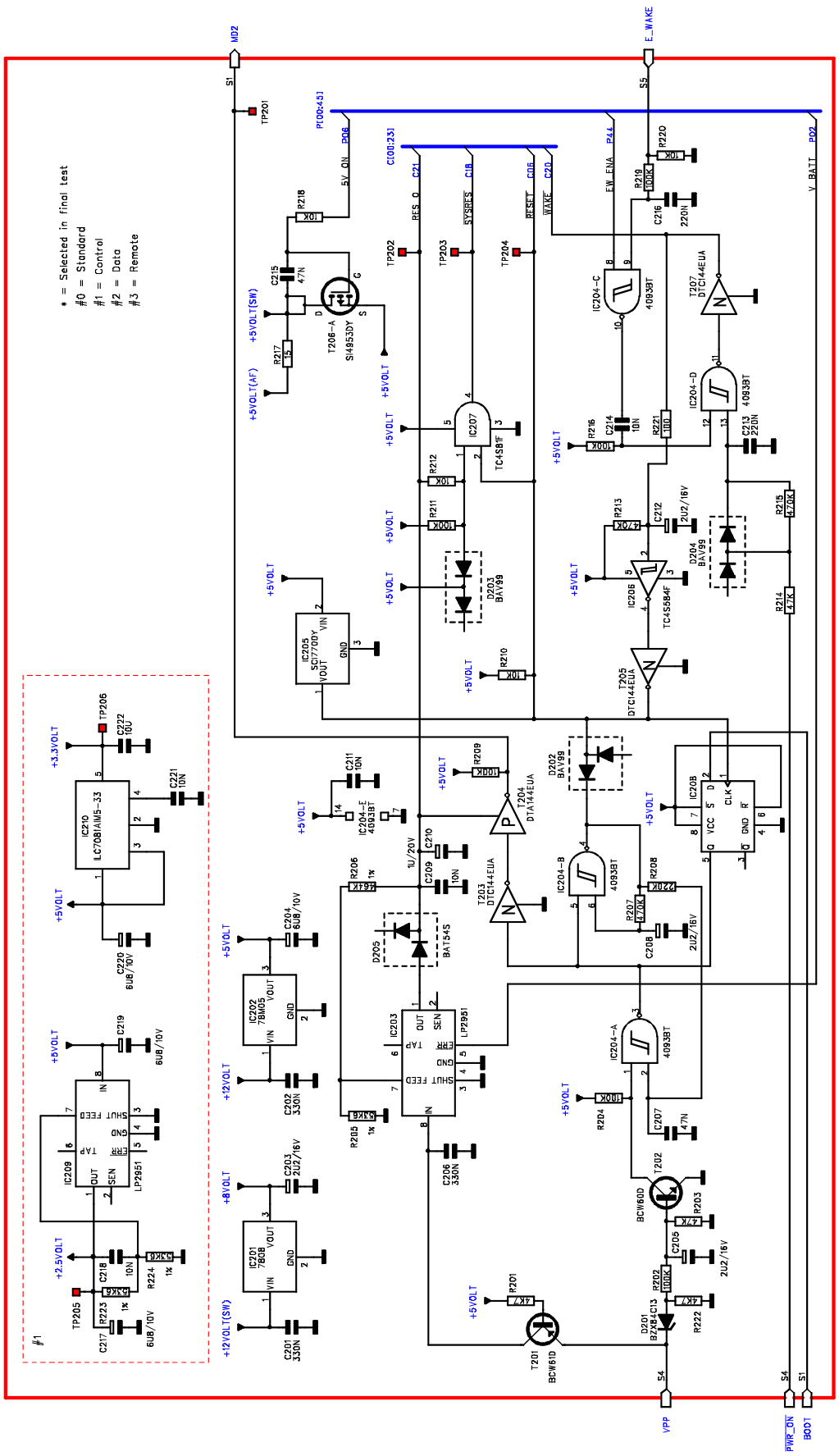

File/Reference	Prepared	Date	Revised by	Revised date	Revision No.	Approved
Manual for TRX3001	TN	08-03-06	TN	09-09-2004	3	PA

Copyright © 2004

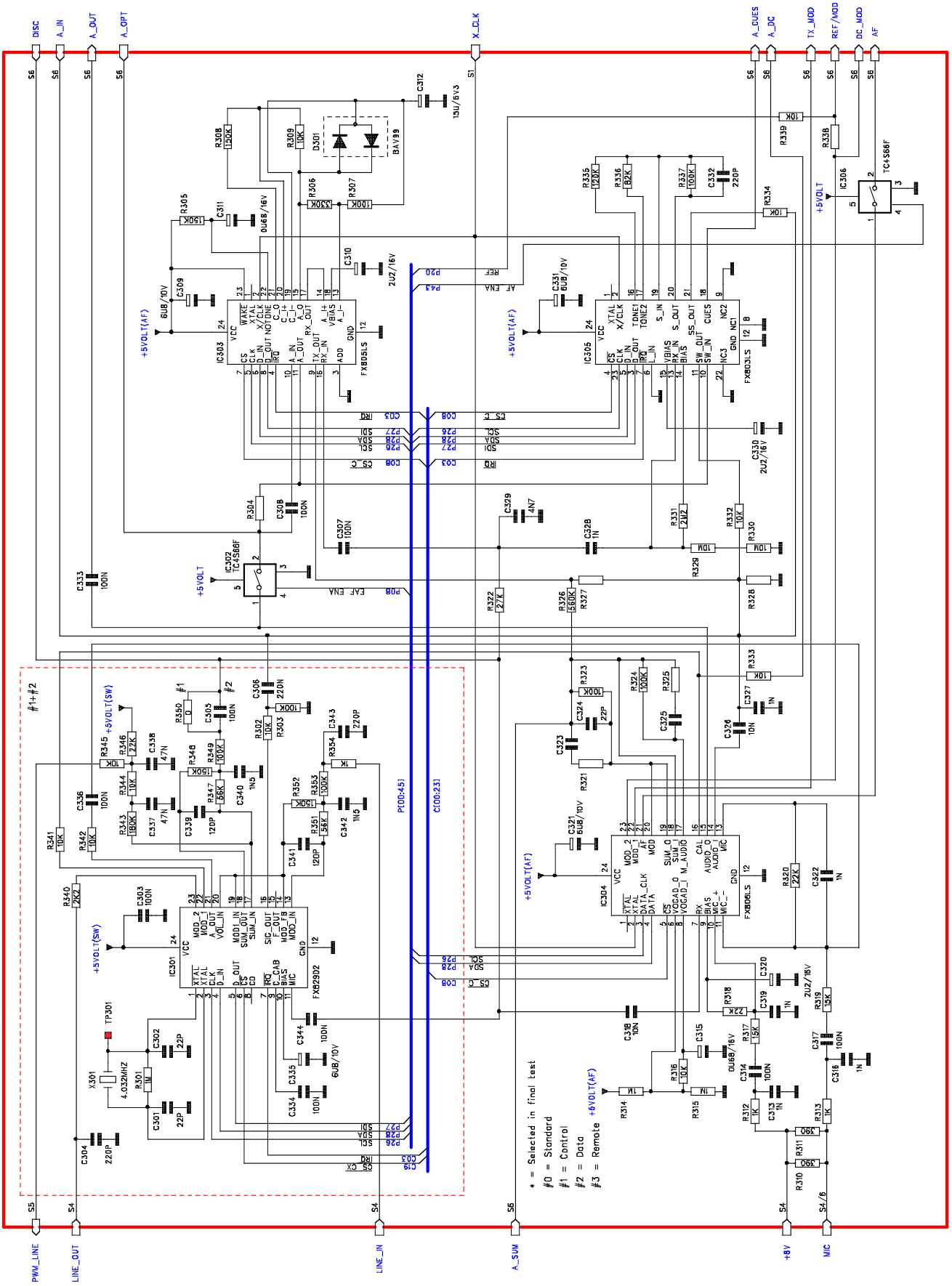

SUBJECT TO CHANGE WITHOUT NOTICE

#2 Data	Unit No.: 3102	Date: 30-07-2002 Sign: PA 5	NIROS COMMUNICATIONS A/S Hirsemarken 5, 3520 Farum
#1 Control	Unit No.: 3101	Date: 08-09-2004 Sign: PA 6	Systemboard TRX3001
#0 Standard	Unit No.: 3100	Drawing No.: 0-3002-03-6 p 3 of 6	PC. Board No.: 779-4
#3 Remote	Unit No.: 3103		

Copyright © 2004

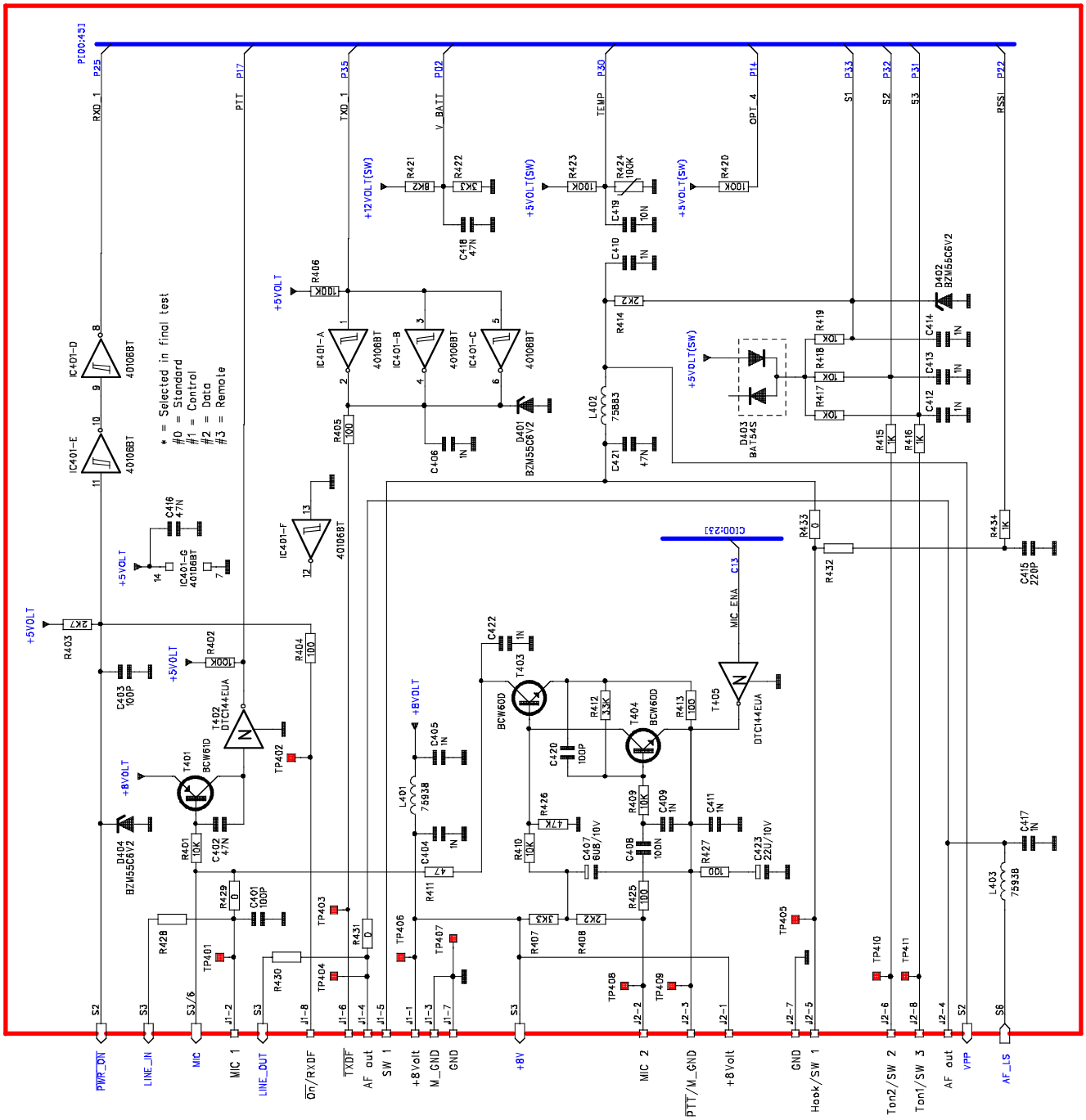

SUBJECT TO CHANGE WITHOUT NOTICE

#2 Data	Unit No.: 3102	Date: 30-07-2002 Sign: PA	5
#1 Control	Unit No.: 3101	Date: 08-09-2004 Sign: PA	6
#0 Standard	Unit No.: 3100	Drawing No.: 0-3002-03-6 p 4 of 6	
#3 Remote	Unit No.: 3103		

NIROS COMMUNICATIONS A/S Hirsemarken 5, 3520 Farum	Systemboard TRX3001
PC. Board No.: 779-4	

Copyright © 2004

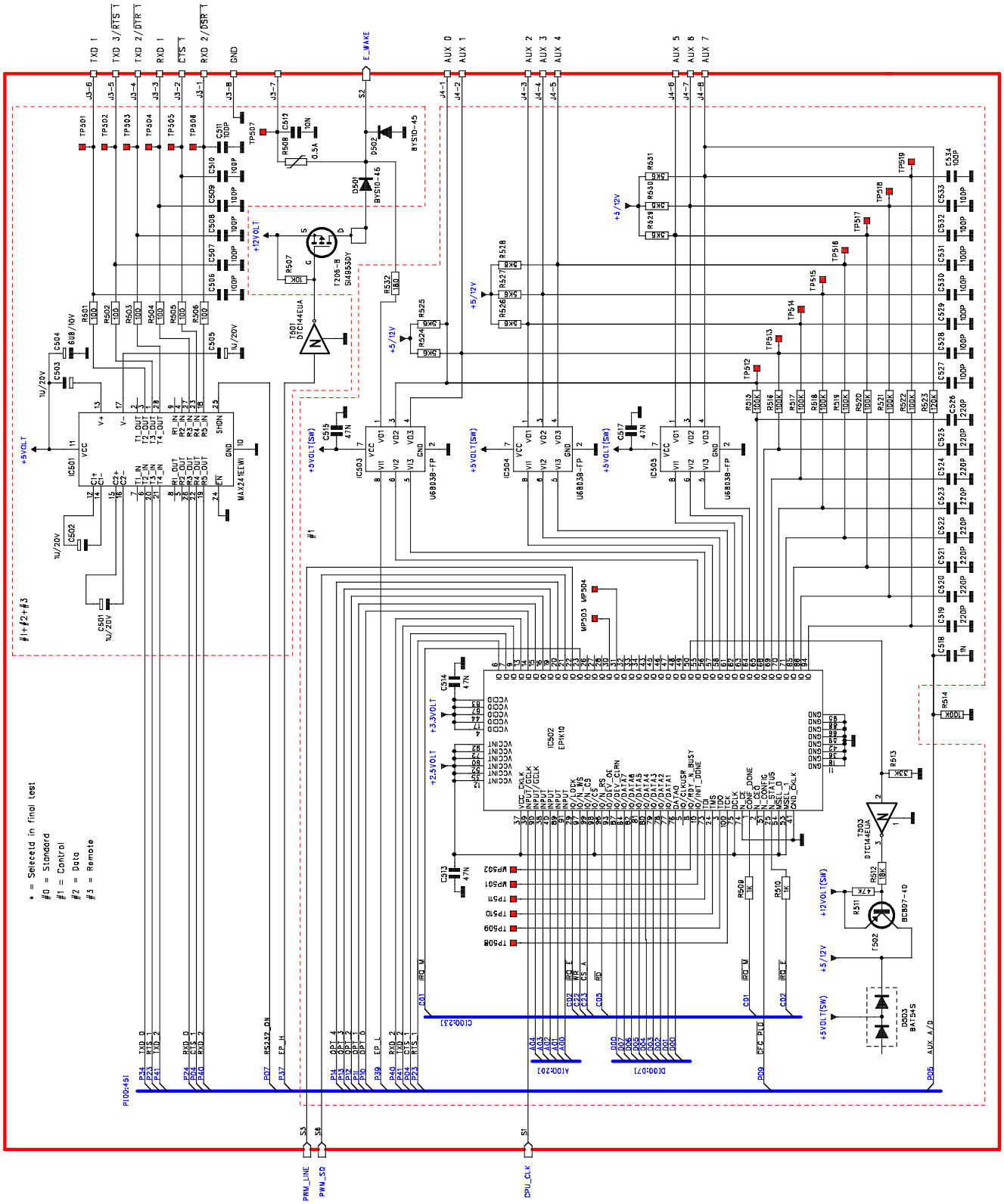

File/Reference	Prepared	Date	Revised by	Revised date	Revision No.	Approved
Manual for TRX3001	TN	08-03-06	TN	09-09-2004	3	PA

Copyright © 2004

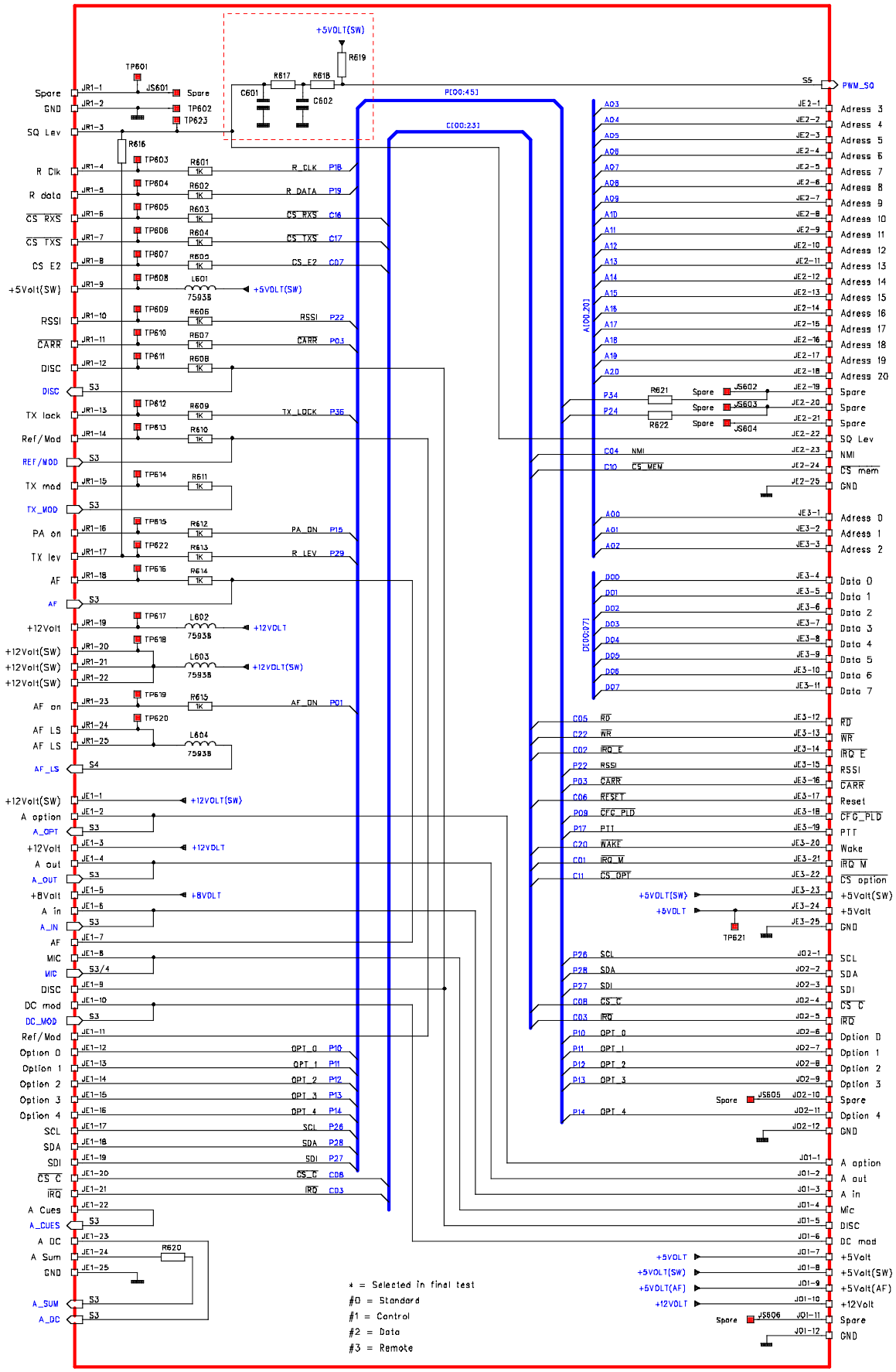

SUBJECT TO CHANGE WITHOUT NOTICE

#2 Data	Unit No.:	3102
#1 Control	Unit No.:	3101
#0 Standard	Unit No.:	3100
#3 Remote	Unit No.:	3103

Date: 30-07-2002 Sign: PA	5	NIROS COMMUNICATIONS A/S Hirsemarken 5, 3520 Farum	Systemboard TRX3001
Date: 08-09-2004 Sign: PA	6		
Drawing No.: 0-3002-03-6 p 6 of 6		PC. Board No.: 779-4	

Copyright © 2004

7.2 Componentside

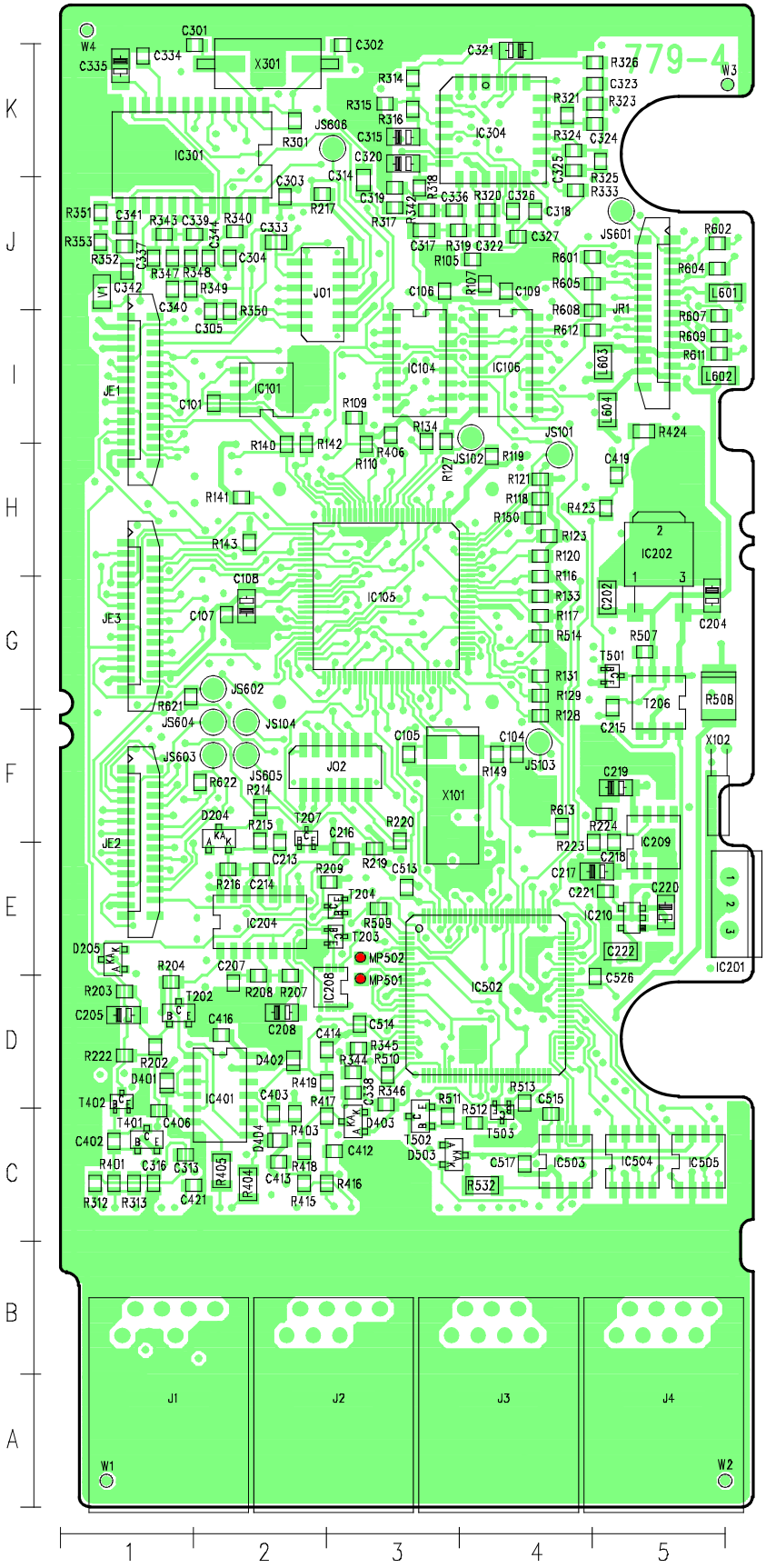

Componentside 779-4

SUBJECT TO CHANGE WITHOUT NOTICE

#2 Data	Unit No.: 3102		
#1 Control	Unit No.: 3101		
#0 Standard	Unit No.: 3100		
#3 Remote	Unit No.: 3103		

Date: 30-07-2002 Sign: PA	5	NIROS COMMUNICATIONS A/S Hirsemarken 5, 3520 Farum	Systemboard TRX3001	
Date: 08-09-2004 Sign: PA	6			
Drawing No.: 0-3002-05-6		PC. Board No.: 779-4		

Copyright © 2004

7.3 Wiringside

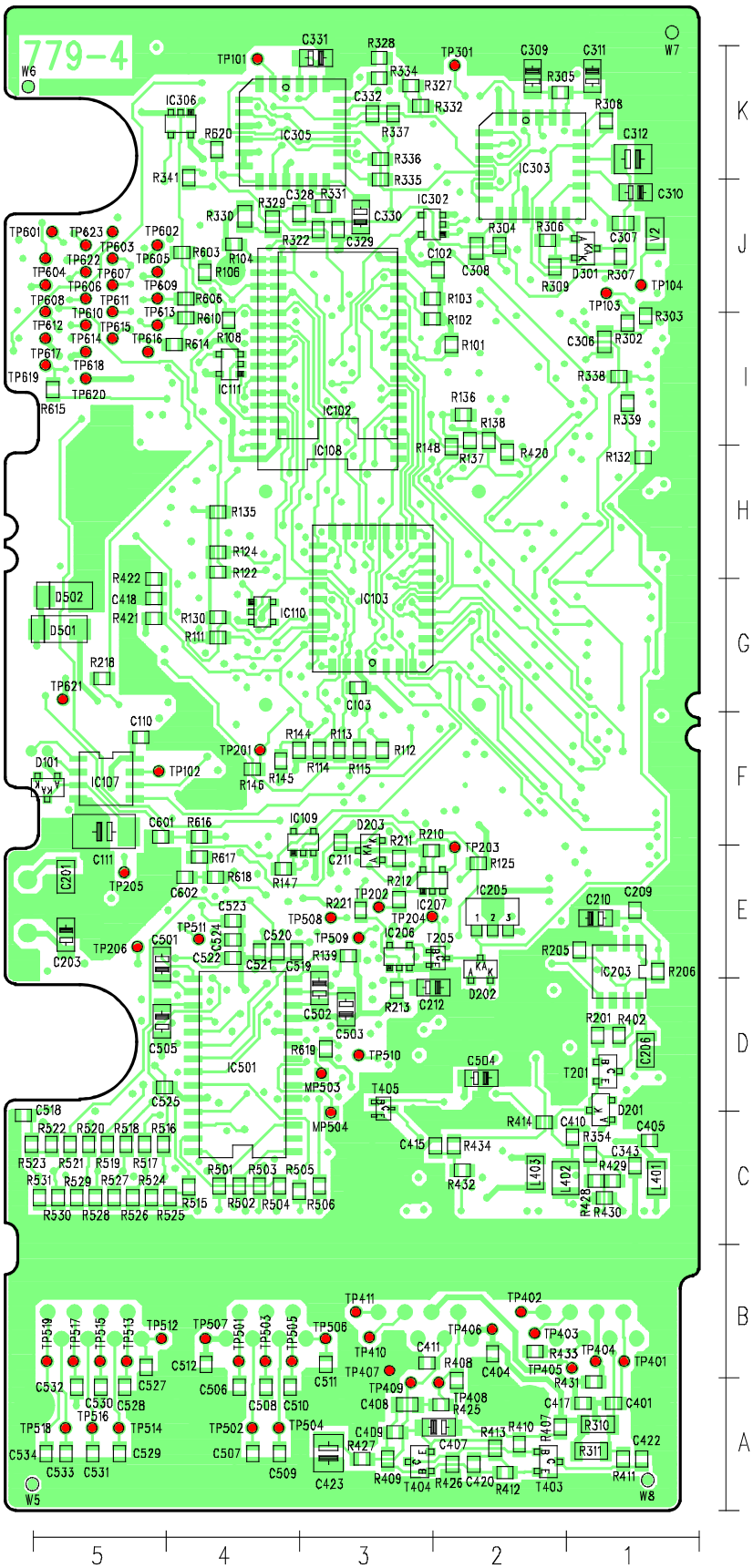

Wiringside 779-4

SUBJECT TO CHANGE WITHOUT NOTICE

#2 Data	Unit No.: 3102		
#1 Control	Unit No.: 3101		
#0 Standard	Unit No.: 3100		
#3 Remote	Unit No.: 3103		

Date: 30-07-2002 Sign: PA	5	NIROS COMMUNICATIONS A/S Hirsemarken 5, 3520 Farum	Systemboard TRX3001
Date: 08-09-2004 Sign: PA	6		
Drawing No.: 0-3002-04-6		PC. Board No.: 779-4	

Copyright © 2004

7.4 Componentside pin number

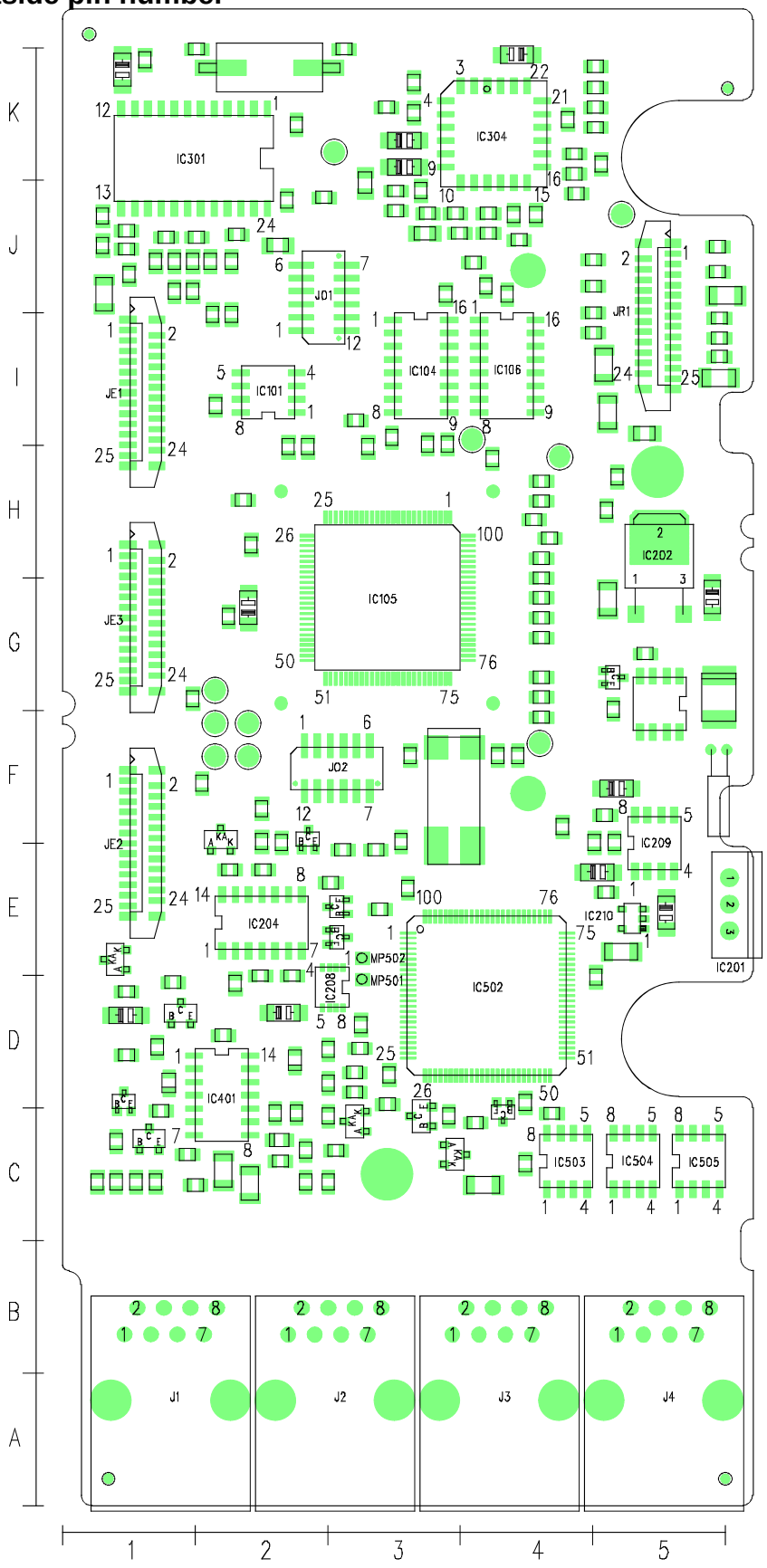

Componentside 779-4

SUBJECT TO CHANGE WITHOUT NOTICE

#2 Data Unit No.: 3102 #1 Control Unit No.: 3101 #0 Standard Unit No.: 3100 #3 Remote Unit No.: 3103	Date: 30-07-2002 Sign: PA Date: 08-09-2004 Sign: PA Drawing No.: 0-3002-05-6	5 6	NIROS COMMUNICATIONS A/S Hirsemarken 5, 3520 Farum PC. Board No.: 779-4	Systemboard TRX3001

Copyright © 2004

7.5 Wiringside pin number

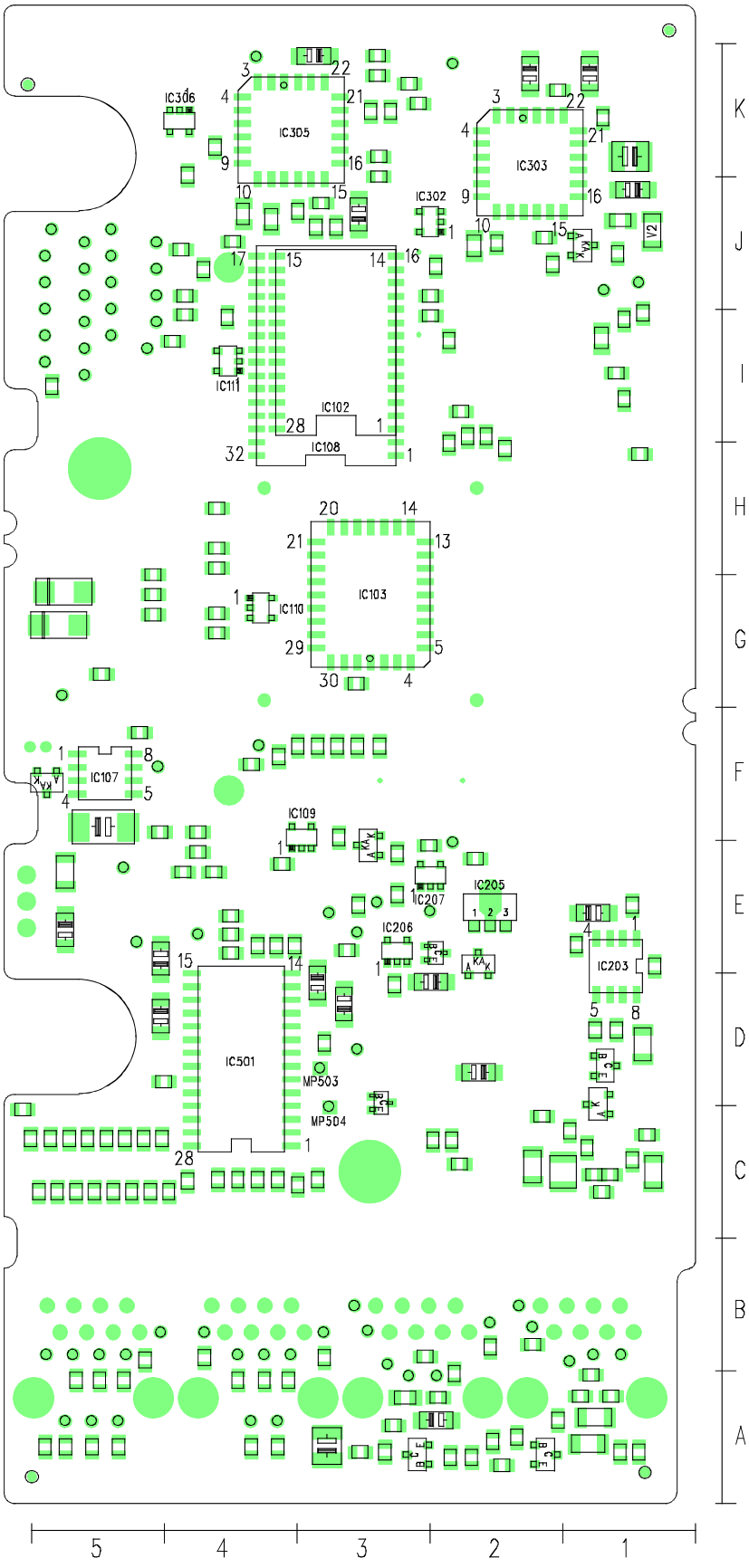

Wiringside 779-4

SUBJECT TO CHANGE WITHOUT NOTICE

#2 Data	Unit No.: 3102	Date: 30-07-2002 Sign: PA 5	NIROS COMMUNICATIONS A/S Hirsemarken 5, 3520 Farum
#1 Control	Unit No.: 3101	Date: 08-09-2004 Sign: PA 6	
#0 Standard	Unit No.: 3100	Drawing No.: 0-3002-04-6	PC. Board No.: 779-4
#3 Remote	Unit No.: 3103		

Systemboard TRX3001

Copyright © 2004

7.6 Fieldlist

Name Systemboard TRX3001 Date 08-09-2004
Drawing No. 0-3002-03-6 Unit No. 3100

Component	Type	Side	Cord	Component	Type	Side	Cord
R101	SMT	BOTTOM	I2	R205	SMT	BOTTOM	E1
R102	SMT	BOTTOM	I3	R206	SMT	BOTTOM	E1
R103	SMT	BOTTOM	J3	R207	SMT	TOP	E2
R104	SMT	BOTTOM	J4	R208	SMT	TOP	E2
R105	SMT	TOP	J4	R209	SMT	TOP	E3
R106	SMT	BOTTOM	J4	R210	SMT	BOTTOM	E3
R107	SMT	TOP	J4	R211	SMT	BOTTOM	E3
R108	SMT	BOTTOM	I4	R212	SMT	BOTTOM	E3
R109	SMT	TOP	I3	R213	SMT	BOTTOM	D3
R110	SMT	TOP	H3	R214	SMT	TOP	F2
R111	SMT	BOTTOM	G4	R215	SMT	TOP	F2
R112	SMT	BOTTOM	F3	R216	SMT	TOP	E2
R113	SMT	BOTTOM	F3	R217	SMT	TOP	J2
R114	SMT	BOTTOM	F3	R218	SMT	BOTTOM	G5
R115	SMT	BOTTOM	F3	R219	SMT	TOP	E3
R116	SMT	TOP	H4	R220	SMT	TOP	F3
R117	SMT	TOP	G4	R221	SMT	BOTTOM	E3
R118	SMT	TOP	H4	R222	SMT	TOP	D1
R119	SMT	TOP	H4	R223	SMT	TOP	F5
R120	SMT	TOP	H4	R224	SMT	TOP	F5
R121	SMT	TOP	H4	R301	SMT	TOP	K2
R122	SMT	BOTTOM	H4	R302	SMT	BOTTOM	I1
R123	SMT	TOP	H4	R303	SMT	BOTTOM	I1
R124	SMT	BOTTOM	H4	R304	SMT	BOTTOM	J2
R125	SMT	BOTTOM	E2	R305	SMT	BOTTOM	K2
R127	SMT	TOP	I3	R306	SMT	BOTTOM	J2
R128	SMT	TOP	F4	R307	SMT	BOTTOM	J1
R129	SMT	TOP	G4	R308	SMT	BOTTOM	K1
R130	SMT	BOTTOM	G4	R309	SMT	BOTTOM	J2
R131	SMT	TOP	G4	R310	SMT	BOTTOM	A1
R132	SMT	BOTTOM	H1	R311	SMT	BOTTOM	A1
R133	SMT	TOP	G4	R312	SMT	TOP	C1
R134	SMT	TOP	I3	R313	SMT	TOP	C1
R135	SMT	BOTTOM	H4	R314	SMT	TOP	K3
R136	SMT	BOTTOM	I2	R315	SMT	TOP	K3
R137	SMT	BOTTOM	I2	R316	SMT	TOP	K3
R138	SMT	BOTTOM	I2	R317	SMT	TOP	J3
R139	SMT	BOTTOM	E3	R318	SMT	TOP	J3
R140	SMT	TOP	H2	R319	SMT	TOP	J3
R141	SMT	TOP	H2	R320	SMT	TOP	J4
R142	SMT	TOP	H2	R321	SMT	TOP	K4
R143	SMT	TOP	H2	R322	SMT	BOTTOM	J3
R144	SMT	BOTTOM	F4	R323	SMT	TOP	K5
R145	SMT	BOTTOM	F4	R324	SMT	TOP	K4
R146	SMT	BOTTOM	F4	R325	SMT	TOP	K5
R147	SMT	BOTTOM	E4	R326	SMT	TOP	K5
R148	SMT	BOTTOM	H2	R327	SMT	BOTTOM	K3
R149	SMT	TOP	F4	R328	SMT	BOTTOM	K3
R150	SMT	TOP	H4	R329	SMT	BOTTOM	J4
R201	SMT	BOTTOM	D1	R330	SMT	BOTTOM	J4
R202	SMT	TOP	D1	R331	SMT	BOTTOM	J3
R203	SMT	TOP	D1	R332	SMT	BOTTOM	K3
R204	SMT	TOP	D1	R333	SMT	TOP	J4

p. 1 of 5 PC. Board No. 779-4

Copyright © 2004

Name Systemboard TRX3001 Date 08-09-2004
Drawing No. 0-3002-03-6 Unit No. 3100

Component	Type	Side	Cord	Component	Type	Side	Cord
R334	SMT	BOTTOM	K3	R433	SMT	BOTTOM	B2
R335	SMT	BOTTOM	K3	R434	SMT	BOTTOM	C2
R336	SMT	BOTTOM	K3	R501	SMT	BOTTOM	C4
R337	SMT	BOTTOM	K3	R502	SMT	BOTTOM	C4
R338	SMT	BOTTOM	I1	R503	SMT	BOTTOM	C4
R339	SMT	BOTTOM	I1	R504	SMT	BOTTOM	C4
R340	SMT	TOP	J2	R505	SMT	BOTTOM	C4
R341	SMT	BOTTOM	K4	R506	SMT	BOTTOM	C3
R342	SMT	TOP	J3	R507	SMT	TOP	G5
R343	SMT	TOP	J1	R508	SMT	TOP	G5
R344	SMT	TOP	D3	R509	SMT	TOP	E3
R345	SMT	TOP	D3	R510	SMT	TOP	D3
R346	SMT	TOP	D3	R511	SMT	TOP	C3
R347	SMT	TOP	J1	R512	SMT	TOP	C4
R348	SMT	TOP	J1	R513	SMT	TOP	D4
R349	SMT	TOP	J1	R514	SMT	TOP	G4
R350	SMT	TOP	I2	R515	SMT	BOTTOM	C4
R351	SMT	TOP	J1	R516	SMT	BOTTOM	C5
R352	SMT	TOP	J1	R517	SMT	BOTTOM	C5
R353	SMT	TOP	J1	R518	SMT	BOTTOM	C5
R354	SMT	BOTTOM	C1	R519	SMT	BOTTOM	C5
R401	SMT	TOP	C1	R520	SMT	BOTTOM	C5
R402	SMT	BOTTOM	D1	R521	SMT	BOTTOM	C5
R403	SMT	TOP	C2	R522	SMT	BOTTOM	C5
R404	SMT	TOP	C2	R523	SMT	BOTTOM	C6
R405	SMT	TOP	C2	R524	SMT	BOTTOM	C5
R406	SMT	TOP	I3	R525	SMT	BOTTOM	C4
R407	SMT	BOTTOM	A2	R526	SMT	BOTTOM	C5
R408	SMT	BOTTOM	A2	R527	SMT	BOTTOM	C5
R409	SMT	BOTTOM	A3	R528	SMT	BOTTOM	C5
R410	SMT	BOTTOM	A2	R529	SMT	BOTTOM	C5
R411	SMT	BOTTOM	A1	R530	SMT	BOTTOM	C5
R412	SMT	BOTTOM	A2	R531	SMT	BOTTOM	C5
R413	SMT	BOTTOM	A2	R532	SMT	TOP	C4
R414	SMT	BOTTOM	C2	R601	SMT	TOP	J5
R415	SMT	TOP	C2	R602	SMT	TOP	J5
R416	SMT	TOP	C3	R603	SMT	BOTTOM	J4
R417	SMT	TOP	C3	R604	SMT	TOP	J5
R418	SMT	TOP	C2	R605	SMT	TOP	J5
R419	SMT	TOP	D3	R606	SMT	BOTTOM	J4
R420	SMT	BOTTOM	H2	R607	SMT	TOP	I5
R421	SMT	BOTTOM	G5	R608	SMT	TOP	J5
R422	SMT	BOTTOM	H5	R609	SMT	TOP	I5
R423	SMT	TOP	H5	R610	SMT	BOTTOM	I4
R424	SMT	TOP	I5	R611	SMT	TOP	I5
R425	SMT	BOTTOM	A2	R612	SMT	TOP	I5
R426	SMT	BOTTOM	A2	R613	SMT	TOP	F4
R427	SMT	BOTTOM	A3	R614	SMT	BOTTOM	I4
R428	SMT	BOTTOM	C1	R615	SMT	BOTTOM	I5
R429	SMT	BOTTOM	C1	R616	SMT	BOTTOM	F4
R430	SMT	BOTTOM	C1	R617	SMT	BOTTOM	E4
R431	SMT	BOTTOM	A1	R618	SMT	BOTTOM	E4
R432	SMT	BOTTOM	C2	R619	SMT	BOTTOM	D3

p. 2 of 5 PC. Board No. 779-4

Copyright © 2004

Name Systemboard TRX3001 Date 08-09-2004
Drawing No. 0-3002-03-6 Unit No. 3100

Component	Type	Side	Cord	Component	Type	Side	Cord
R620	SMT	BOTTOM	K4	C318	SMT	TOP	J4
R621	SMT	TOP	G1	C319	SMT	TOP	J3
R622	SMT	TOP	F2	C320	SMT	TOP	K3
C101	SMT	TOP	I2	C321	SMT	TOP	K4
C102	SMT	BOTTOM	J2	C322	SMT	TOP	J4
C103	SMT	BOTTOM	G3	C323	SMT	TOP	K5
C104	SMT	TOP	F4	C324	SMT	TOP	K5
C105	SMT	TOP	F3	C325	SMT	TOP	K4
C106	SMT	TOP	J3	C326	SMT	TOP	J4
C107	SMT	TOP	G2	C327	SMT	TOP	J4
C108	SMT	TOP	G2	C328	SMT	BOTTOM	J4
C109	SMT	TOP	J4	C329	SMT	BOTTOM	J3
C110	SMT	BOTTOM	F5	C330	SMT	BOTTOM	J3
C111	SMT	BOTTOM	F5	C331	SMT	BOTTOM	K3
C201	SMT	BOTTOM	E5	C332	SMT	BOTTOM	K3
C202	SMT	TOP	G5	C333	SMT	TOP	J2
C203	SMT	BOTTOM	E5	C334	SMT	TOP	K1
C204	SMT	TOP	G5	C335	SMT	TOP	K1
C205	SMT	TOP	D1	C336	SMT	TOP	J3
C206	SMT	BOTTOM	D1	C337	SMT	TOP	J1
C207	SMT	TOP	D2	C338	SMT	TOP	D3
C208	SMT	TOP	D2	C339	SMT	TOP	J2
C209	SMT	BOTTOM	E1	C340	SMT	TOP	J1
C210	SMT	BOTTOM	E1	C341	SMT	TOP	J1
C211	SMT	BOTTOM	F3	C342	SMT	TOP	J1
C212	SMT	BOTTOM	D2	C343	SMT	BOTTOM	C1
C213	SMT	TOP	F2	C344	SMT	TOP	J2
C214	SMT	TOP	E2	C401	SMT	BOTTOM	A1
C215	SMT	TOP	G5	C402	SMT	TOP	C1
C216	SMT	TOP	E3	C403	SMT	TOP	C2
C217	SMT	TOP	E5	C404	SMT	BOTTOM	B2
C218	SMT	TOP	F5	C405	SMT	BOTTOM	C1
C219	SMT	TOP	F5	C406	SMT	TOP	C1
C220	SMT	TOP	E5	C407	SMT	BOTTOM	A2
C221	SMT	TOP	E5	C408	SMT	BOTTOM	A3
C222	SMT	TOP	E5	C409	SMT	BOTTOM	A3
C301	SMT	TOP	K2	C410	SMT	BOTTOM	C1
C302	SMT	TOP	K3	C411	SMT	BOTTOM	B3
C303	SMT	TOP	J2	C412	SMT	TOP	C3
C304	SMT	TOP	J2	C413	SMT	TOP	C2
C305	SMT	TOP	I2	C414	SMT	TOP	D3
C306	SMT	BOTTOM	I1	C415	SMT	BOTTOM	C2
C307	SMT	BOTTOM	J1	C416	SMT	TOP	D2
C308	SMT	BOTTOM	J2	C417	SMT	BOTTOM	A1
C309	SMT	BOTTOM	K2	C418	SMT	BOTTOM	G5
C310	SMT	BOTTOM	J1	C419	SMT	TOP	H5
C311	SMT	BOTTOM	K1	C420	SMT	BOTTOM	A2
C312	SMT	BOTTOM	K1	C421	SMT	TOP	C2
C313	SMT	TOP	C1	C422	SMT	BOTTOM	A1
C314	SMT	TOP	J3	C423	SMT	BOTTOM	A3
C315	SMT	TOP	K3	C501	SMT	BOTTOM	E5
C316	SMT	TOP	C1	C502	SMT	BOTTOM	D3
C317	SMT	TOP	J3	C503	SMT	BOTTOM	D3

p. 3 of 5 PC. Board No. 779-4

Copyright © 2004

Name Systemboard TRX3001 Date 08-09-2004
Drawing No. 0-3002-03-6 Unit No. 3100

Component	Type	Side	Cord	Component	Type	Side	Cord
C504	SMT	BOTTOM	D2	D203	SMT	BOTTOM	E3
C505	SMT	BOTTOM	D5	D204	SMT	TOP	F2
C506	SMT	BOTTOM	A4	D205	SMT	TOP	E1
C507	SMT	BOTTOM	A4	D301	SMT	BOTTOM	J1
C508	SMT	BOTTOM	A4	D401	SMT	TOP	D1
C509	SMT	BOTTOM	A4	D402	SMT	TOP	D2
C510	SMT	BOTTOM	A4	D403	SMT	TOP	C3
C511	SMT	BOTTOM	B3	D404	SMT	TOP	C2
C512	SMT	BOTTOM	B4	D501	SMT	BOTTOM	G5
C513	SMT	TOP	E3	D502	SMT	BOTTOM	G5
C514	SMT	TOP	D3	D503	SMT	TOP	C3
C515	SMT	TOP	C4	IC101	SMT	TOP	I2
C517	SMT	TOP	C4	IC102	SMT	BOTTOM	I3
C518	SMT	BOTTOM	C6	IC103	SMT	BOTTOM	G3
C519	SMT	BOTTOM	E4	IC104	SMT	TOP	I3
C520	SMT	BOTTOM	E4	IC105	SMT	TOP	G3
C521	SMT	BOTTOM	E4	IC106	SMT	TOP	I4
C522	SMT	BOTTOM	E4	IC107	SMT	BOTTOM	F5
C523	SMT	BOTTOM	E4	IC108	SMT	BOTTOM	I3
C524	SMT	BOTTOM	E4	IC109	SMT	BOTTOM	F3
C525	SMT	BOTTOM	D5	IC110	SMT	BOTTOM	G4
C526	SMT	TOP	D5	IC111	SMT	BOTTOM	I4
C527	SMT	BOTTOM	B5	IC201	LEAD	TOP	E6
C528	SMT	BOTTOM	A5	IC202	SMT	TOP	H5
C529	SMT	BOTTOM	A5	IC203	SMT	BOTTOM	E1
C530	SMT	BOTTOM	A5	IC204	SMT	TOP	E2
C531	SMT	BOTTOM	A5	IC205	SMT	BOTTOM	E2
C532	SMT	BOTTOM	A5	IC206	SMT	BOTTOM	E3
C533	SMT	BOTTOM	A5	IC207	SMT	BOTTOM	E3
C534	SMT	BOTTOM	A5	IC208	SMT	TOP	D3
C601	SMT	BOTTOM	F5	IC209	SMT	TOP	F5
C602	SMT	BOTTOM	E4	IC210	SMT	TOP	E5
X101	SMT	TOP	F3	IC301	SMT	TOP	K1
X102	LEAD	TOP	F5	IC302	SMT	BOTTOM	J3
X301	SMT	TOP	K2	IC303	SMT	BOTTOM	K2
T201	SMT	BOTTOM	D1	IC304	SMT	TOP	K4
T202	SMT	TOP	D1	IC305	SMT	BOTTOM	K4
T203	SMT	TOP	E3	IC306	SMT	BOTTOM	K4
T204	SMT	TOP	E3	IC401	SMT	TOP	D2
T205	SMT	BOTTOM	E2	IC501	SMT	BOTTOM	D4
T206	SMT	TOP	G5	IC502	SMT	TOP	D4
T207	SMT	TOP	F2	IC503	SMT	TOP	C4
T401	SMT	TOP	C1	IC504	SMT	TOP	C5
T402	SMT	TOP	D1	IC505	SMT	TOP	C5
T403	SMT	BOTTOM	A2	L401	SMT	BOTTOM	C1
T404	SMT	BOTTOM	A3	L402	SMT	BOTTOM	C2
T405	SMT	BOTTOM	D3	L403	SMT	BOTTOM	C2
T501	SMT	TOP	G5	L601	SMT	TOP	J6
T502	SMT	TOP	C3	L602	SMT	TOP	I5
T503	SMT	TOP	C4	L603	SMT	TOP	I5
D101	SMT	BOTTOM	F5	L604	SMT	TOP	I5
D201	SMT	BOTTOM	D1	TP101	SMT	BOTTOM	K4
D202	SMT	BOTTOM	E2	TP102	SMT	BOTTOM	F5

p. 4 of 5 PC. Board No. 779-4

Copyright © 2004

Name Systemboard TRX3001 Date 08-09-2004
Drawing No. 0-3002-03-6 Unit No. 3100

Component	Type	Side	Cord	Component	Type	Side	Cord
TP103	SMT	BOTTOM	J1	TP615	SMT	BOTTOM	I5
TP104	SMT	BOTTOM	J1	TP616	SMT	BOTTOM	I5
TP201	SMT	BOTTOM	F4	TP617	SMT	BOTTOM	I5
TP202	SMT	BOTTOM	E3	TP618	SMT	BOTTOM	I5
TP203	SMT	BOTTOM	E2	TP619	SMT	BOTTOM	I5
TP204	SMT	BOTTOM	E3	TP620	SMT	BOTTOM	I5
TP205	SMT	BOTTOM	E5	TP621	SMT	BOTTOM	G5
TP206	SMT	BOTTOM	E5	TP622	SMT	BOTTOM	J5
TP301	SMT	BOTTOM	K2	TP623	SMT	BOTTOM	J5
TP401	SMT	BOTTOM	B1	MP501	SMT	TOP	D3
TP402	SMT	BOTTOM	B2	MP502	SMT	TOP	E3
TP403	SMT	BOTTOM	B2	MP503	SMT	BOTTOM	D3
TP404	SMT	BOTTOM	B1	MP504	SMT	BOTTOM	C3
TP405	SMT	BOTTOM	B1	J1	LEAD	TOP	B1
TP406	SMT	BOTTOM	B2	J2	LEAD	TOP	B3
TP407	SMT	BOTTOM	B3	J3	LEAD	TOP	B4
TP408	SMT	BOTTOM	A2	J4	LEAD	TOP	B5
TP409	SMT	BOTTOM	A3	JE1	SMT	TOP	I1
TP410	SMT	BOTTOM	B3	JR1	SMT	TOP	I5
TP411	SMT	BOTTOM	B3	JO1	SMT	TOP	J2
TP501	SMT	BOTTOM	B4	JE2	SMT	TOP	F1
TP502	SMT	BOTTOM	A4	JO2	SMT	TOP	F3
TP503	SMT	BOTTOM	B4	JE3	SMT	TOP	G1
TP504	SMT	BOTTOM	A4	JS101	SMT	TOP	H4
TP505	SMT	BOTTOM	B4	JS102	SMT	TOP	I4
TP506	SMT	BOTTOM	B3	JS103	SMT	TOP	F4
TP507	SMT	BOTTOM	B4	JS104	SMT	TOP	F2
TP508	SMT	BOTTOM	E3	JS601	SMT	TOP	J5
TP509	SMT	BOTTOM	E3	JS602	SMT	TOP	G2
TP510	SMT	BOTTOM	D3	JS603	SMT	TOP	F2
TP511	SMT	BOTTOM	E4	JS604	SMT	TOP	F2
TP512	SMT	BOTTOM	B5	JS605	SMT	TOP	F2
TP513	SMT	BOTTOM	B5	JS606	SMT	TOP	K3
TP514	SMT	BOTTOM	A5	W1	SMT	TOP	A1
TP515	SMT	BOTTOM	B5	W2	SMT	TOP	A6
TP516	SMT	BOTTOM	A5	W3	SMT	TOP	K6
TP517	SMT	BOTTOM	B5	W4	SMT	TOP	L1
TP518	SMT	BOTTOM	A5	W5	SMT	BOTTOM	A6
TP519	SMT	BOTTOM	B5	W6	SMT	BOTTOM	K6
TP601	SMT	BOTTOM	J5	W7	SMT	BOTTOM	L1
TP602	SMT	BOTTOM	J5	W8	SMT	BOTTOM	A1
TP603	SMT	BOTTOM	J5	V1	SMT	TOP	J1
TP604	SMT	BOTTOM	J5	V2	SMT	BOTTOM	J1
TP605	SMT	BOTTOM	J5				
TP606	SMT	BOTTOM	J5				
TP607	SMT	BOTTOM	J5				
TP608	SMT	BOTTOM	J5				
TP609	SMT	BOTTOM	J5				
TP610	SMT	BOTTOM	J5				
TP611	SMT	BOTTOM	J5				
TP612	SMT	BOTTOM	J5				
TP613	SMT	BOTTOM	I5				
TP614	SMT	BOTTOM	I5				

p. 5 of 5 PC. Board No. 779-4

Copyright © 2004

7.7 Partlist

Partlist for Systemboard TRX3001 Date 08-09-2004
Drawing No. 0-3002-03-6 Unit No. 3100

Component	Description	Value	Niros No.
	Systemboard Data	#2	3102
	Systemboard Control	#1	3101
	Systemboard Standard	#0	3100
	Systemboard Remote	#3	3103
R101	Resistor,chip603	1 Mohm	14105
R102	Resistor,chip603	1 Mohm	14105
R103	Resistor,chip603	1 Mohm	14105
R104	Resistor,chip603	1 Mohm	14105
R105	Resistor,chip603	1 Mohm	14105
R106	Resistor,chip603	1 Mohm	14105
R107	Resistor,chip603	1 Mohm	14105
R108	Resistor,chip603	1 Mohm	14105
R109	Resistor,chip603	10 Kohm	14103
R110	Resistor,chip603	10 Kohm	14103
R111	Resistor,chip603	10 Kohm	14103
R112	Resistor,chip603	100 Kohm	14104
R113	Resistor,chip603	100 Kohm	14104
R114	Resistor,chip603	100 Kohm	14104
R115	Resistor,chip603	100 Kohm	14104
R116	Resistor,chip603	100 Kohm	14104
R117	Resistor,chip603	100 Kohm	14104
R118	Resistor,chip603	100 Kohm	14104
R119	Resistor,chip603	100 Kohm	14104
R120	Resistor,chip603	100 Kohm	14104
R121	Resistor,chip603	100 Kohm	14104
R122	Resistor,chip603	100 Kohm	14104
R123	Resistor,chip603	100 Kohm	14104
R124	Resistor,chip603	10 Kohm	14103
R125	Resistor,chip603	100 Kohm	14104
R127	Resistor,chip603	100 Kohm	14104
R128	Resistor,chip603	1 Mohm	14105
R129	Resistor,chip603	1 Mohm	14105
R130	Resistor,chip603	100 Kohm	14104
R131	Resistor,chip603	1 Mohm	14105
R132	Resistor,chip603	1 Mohm	14105
R133	Resistor,chip603	100 Kohm	14104
R134	Resistor,chip603	100 Kohm	14104
R135	Resistor,chip603	100 Kohm	14104
R136	Resistor,chip603	4,7 Kohm	14472
R137	Resistor,chip603	100 Kohm	14104
R138	Resistor,chip603	100 Kohm	14104
R139	Resistor,chip603	100 Kohm	14104
R140	Resistor,chip603	100 Kohm	14104
R141	Resistor,chip603	1 Mohm	14105

p. 1 of 19 PC. Board No. 779-4

Copyright © 2004

Partlist for Systemboard TRX3001 Date 08-09-2004
Drawing No. 0-3002-03-6 Unit No. 3100

Component	Description		Value	Niros No.
R142	Resistor,chip603		1 Mohm	14105
R143	Resistor,chip603		100 Kohm	14104
R144	Resistor,chip603		Not used	
R145	Resistor,chip603		0 Ohm	14000
R146	Resistor,chip603		Not used	
R147	Resistor,chip603		0 Ohm	14000
R148	Resistor,chip603		100 Ohm	14101
R149	Resistor,chip603	#2	1 Kohm	14102
	Resistor,chip603	#1	100 Ohm	14101
	Resistor,chip603	#0	1 Kohm	14102
	Resistor,chip603	#3	1 Kohm	14102
R150	Resistor,chip603		1 Kohm	14102
R201	Resistor,chip603		4,7 Kohm	14472
R202	Resistor,chip603		100 Kohm	14104
R203	Resistor,chip603		47 Kohm	14473
R204	Resistor,chip603		100 Kohm	14104
R205	Resistor,chip606_1%		53,6 Kohm	10928
R206	Resistor,chip603_1%		464 Kohm	10911
R207	Resistor,chip603		470 Kohm	14474
R208	Resistor,chip603		220 Kohm	14224
R209	Resistor,chip603		100 Kohm	14104
R210	Resistor,chip603		10 Kohm	14103
R211	Resistor,chip603		100 Kohm	14104
R212	Resistor,chip603		10 Kohm	14103
R213	Resistor,chip603		470 Kohm	14474
R214	Resistor,chip603		47 Kohm	14473
R215	Resistor,chip603		470 Kohm	14474
R216	Resistor,chip603		100 Kohm	14104
R217	Resistor,chip603		15 Ohm	14150
R218	Resistor,chip603		10 Kohm	14103
R219	Resistor,chip603		100 Kohm	14104
R220	Resistor,chip603		10 Kohm	14103
R221	Resistor,chip603		100 Ohm	14101
R222	Resistor,chip603		4,7 Kohm	14472
R223	Resistor,chip603_1%	#2	Not used	
	Resistor,chip603_1%	#1	53,6 Kohm	10928
	Resistor,chip603_1%	#0	Not used	
	Resistor,chip603_1%	#3	Not used	
R224	Resistor,chip603_1%	#2	Not used	
	Resistor,chip603_1%	#1	53,6 Kohm	10928
	Resistor,chip603_1%	#0	Not used	
	Resistor,chip603_1%	#3	Not used	
R301	Resistor,chip603	#2	1 Mohm	14105
	Resistor,chip603	#1	1 Mohm	14105
	Resistor,chip603	#0	Not used	
	Resistor,chip603	#3	Not used	

Copyright © 2004

Partlist for Systemboard TRX3001 Date 08-09-2004
Drawing No. 0-3002-03-6 Unit No. 3100

Component	Description		Value	Niros No.
R302	Resistor,chip603	#2	10 Kohm	14103
	Resistor,chip603	#1	10 Kohm	14103
	Resistor,chip603	#0	Not used	
	Resistor,chip603	#3	Not used	
R303	Resistor,chip603	#2	100 Kohm	14104
	Resistor,chip603	#1	100 Kohm	14104
	Resistor,chip603	#0	Not used	
	Resistor,chip603	#3	Not used	
R304	Resistor,chip603		Not used	
R305	Resistor,chip603		150 Kohm	14154
R306	Resistor,chip603		330 Kohm	14334
R307	Resistor,chip603		100 Kohm	14104
R308	Resistor,chip603		150 Kohm	14154
R309	Resistor,chip603		10 Kohm	14103
R310	Resistor,chip1206		390 Ohm	12391
R311	Resistor,chip1206		390 Ohm	12391
R312	Resistor,chip603		1 Kohm	14102
R313	Resistor,chip603		1 Kohm	14102
R314	Resistor,chip603		1 Mohm	14105
R315	Resistor,chip603		1 Mohm	14105
R316	Resistor,chip603		10 Kohm	14103
R317	Resistor,chip603		15 Kohm	14153
R318	Resistor,chip603		22 Kohm	14223
R319	Resistor,chip603		15 Kohm	14153
R320	Resistor,chip603		22 Kohm	14223
R321	Resistor,chip603		Not used	
R322	Resistor,chip603		27 Kohm	14273
R323	Resistor,chip603		100 Kohm	14104
R324	Resistor,chip603		100 Kohm	14104
R325	Resistor,chip603		Not used	
R326	Resistor,chip603		560 Kohm	14564
R327	Resistor,chip603		Not used	
R328	Resistor,chip603		Not used	
R329	Resistor,chip805		10 Mohm	13106
R330	Resistor,chip805		10 Mohm	13106
R331	Resistor,chip603		2,2 Mohm	14225
R332	Resistor,chip603		10 Kohm	14103
R333	Resistor,chip603		10 Kohm	14103
R334	Resistor,chip603		10 Kohm	14103
R335	Resistor,chip603		120 Kohm	14124
R336	Resistor,chip603		82 Kohm	14823
R337	Resistor,chip603		100 Kohm	14104
R338	Resistor,chip603		Not used	
R339	Resistor,chip603		10 Kohm	14103
R340	Resistor,chip603	#2	2,2 Kohm	14222

p. 3 of 19 PC. Board No. 779-4

Copyright © 2004

Partlist for Systemboard TRX3001 Date 08-09-2004
Drawing No. 0-3002-03-6 Unit No. 3100

Component	Description		Value	Niros No.
	Resistor,chip603	#1	2,2 Kohm	14222
	Resistor,chip603	#0	Not used	
	Resistor,chip603	#3	Not used	
R341	Resistor,chip603	#2	10 Kohm	14103
	Resistor,chip603	#1	10 Kohm	14103
	Resistor,chip603	#0	Not used	
	Resistor,chip603	#3	Not used	
R342	Resistor,chip603	#2	10 Kohm	14103
	Resistor,chip603	#1	10 Kohm	14103
	Resistor,chip603	#0	Not used	
	Resistor,chip603	#3	Not used	
R343	Resistor,chip603	#2	180 Kohm	14184
	Resistor,chip603	#1	180 Kohm	14184
	Resistor,chip603	#0	Not used	
	Resistor,chip603	#3	Not used	
R344	Resistor,chip603	#2	10 Kohm	14103
	Resistor,chip603	#1	10 Kohm	14103
	Resistor,chip603	#0	Not used	
	Resistor,chip603	#3	Not used	
R345	Resistor,chip603	#2	10 Kohm	14103
	Resistor,chip603	#1	10 Kohm	14103
	Resistor,chip603	#0	Not used	
	Resistor,chip603	#3	Not used	
R346	Resistor,chip603	#2	22 Kohm	14223
	Resistor,chip603	#1	22 Kohm	14223
	Resistor,chip603	#0	Not used	
	Resistor,chip603	#3	Not used	
R347	Resistor,chip603	#2	56 Kohm	14563
	Resistor,chip603	#1	56 Kohm	14563
	Resistor,chip603	#0	Not used	
	Resistor,chip603	#3	Not used	
R348	Resistor,chip603	#2	150 Kohm	14154
	Resistor,chip603	#1	150 Kohm	14154
	Resistor,chip603	#0	Not used	
	Resistor,chip603	#3	Not used	
R349	Resistor,chip603	#2	100 Kohm	14104
	Resistor,chip603	#1	100 Kohm	14104
	Resistor,chip603	#0	Not used	
	Resistor,chip603	#3	Not used	
R350	Resistor,chip603	#2	Not used	
	Resistor,chip603	#1	0 Ohm	14000
	Resistor,chip603	#0	Not used	
	Resistor,chip603	#3	Not used	
R351	Resistor,chip603	#2	56 Kohm	14563
	Resistor,chip603	#1	56 Kohm	14563
	Resistor,chip603	#0	Not used	
	Resistor,chip603	#3	Not used	

p. 4 of 19 PC. Board No. 779-4

Copyright © 2004

Partlist for Systemboard TRX3001 Date 08-09-2004
Drawing No. 0-3002-03-6 Unit No. 3100

Component	Description	Value	Niros No.
R352	Resistor,chip603 #2	150 Kohm	14154
	Resistor,chip603 #1	150 Kohm	14154
	Resistor,chip603 #0	Not used	
	Resistor,chip603 #3	Not used	
R353	Resistor,chip603 #2	100 Kohm	14104
	Resistor,chip603 #1	100 Kohm	14104
	Resistor,chip603 #0	Not used	
	Resistor,chip603 #3	Not used	
R354	Resistor,chip603 #2	1 Kohm	14102
	Resistor,chip603 #1	1 Kohm	14102
	Resistor,chip603 #0	Not used	
	Resistor,chip603 #3	Not used	
R401	Resistor,chip603	10 Kohm	14103
R402	Resistor,chip603	100 Kohm	14104
R403	Resistor,chip603	2,7 Kohm	14272
R404	Resistor,chip1206	100 Ohm	12101
R405	Resistor,chip1206	100 Ohm	12101
R406	Resistor,chip603	100 Kohm	14104
R407	Resistor,chip603	3,3 Kohm	14332
R408	Resistor,chip603	2,2 Kohm	14222
R409	Resistor,chip603	10 Kohm	14103
R410	Resistor,chip603	10 Kohm	14103
R411	Resistor,chip603	47 Ohm	14470
R412	Resistor,chip603	33 Kohm	14333
R413	Resistor,chip603	100 Ohm	14101
R414	Resistor,chip603	2,2 Kohm	14222
R415	Resistor,chip603	1 Kohm	14102
R416	Resistor,chip603	1 Kohm	14102
R417	Resistor,chip603	10 Kohm	14103
R418	Resistor,chip603	10 Kohm	14103
R419	Resistor,chip603	10 Kohm	14103
R420	Resistor,chip603	100 Kohm	14104
R421	Resistor,chip603	8,2 Kohm	14822
R422	Resistor,chip603	3,3 Kohm	14332
R423	Resistor,chip603	100 Kohm	14104
R424	Resistor,ntc	100 Kohm	11010
R425	Resistor,chip603	100 Ohm	14101
R426	Resistor,chip603	47 Kohm	14473
R427	Resistor,chip603	100 Ohm	14101
R428	Resistor,chip603	Not used	
R429	Resistor,chip603	0 Ohm	14000
R430	Resistor,chip603	Not used	
R431	Resistor,chip603	0 Ohm	14000
R432	Resistor,chip603	Not used	
R433	Resistor,chip603	0 Ohm	14000

p. 5 of 19 PC. Board No. 779-4

Copyright © 2004

Partlist for Systemboard TRX3001 Date 08-09-2004
Drawing No. 0-3002-03-6 Unit No. 3100

Component	Description		Value	Niros No.
R434	Resistor,chip603		1 Kohm	14102
R501	Resistor,chip603	#2	100 Ohm	14101
	Resistor,chip603	#1	100 Ohm	14101
	Resistor,chip603	#0	Not used	
	Resistor,chip603	#3	100 Ohm	14101
R502	Resistor,chip603	#2	100 Ohm	14101
	Resistor,chip603	#1	100 Ohm	14101
	Resistor,chip603	#0	Not used	
	Resistor,chip603	#3	100 Ohm	14101
R503	Resistor,chip603	#2	100 Ohm	14101
	Resistor,chip603	#1	100 Ohm	14101
	Resistor,chip603	#0	Not used	
	Resistor,chip603	#3	100 Ohm	14101
R504	Resistor,chip603	#2	100 Ohm	14101
	Resistor,chip603	#1	100 Ohm	14101
	Resistor,chip603	#0	Not used	
	Resistor,chip603	#3	100 Ohm	14101
R505	Resistor,chip603	#2	100 Ohm	14101
	Resistor,chip603	#1	100 Ohm	14101
	Resistor,chip603	#0	Not used	
	Resistor,chip603	#3	100 Ohm	14101
R506	Resistor,chip603	#2	100 Ohm	14101
	Resistor,chip603	#1	100 Ohm	14101
	Resistor,chip603	#0	Not used	
	Resistor,chip603	#3	100 Ohm	14101
R507	Resistor,chip603		10 Kohm	14103
R508	Resistor,ptc	#2	0.5 A	83364
	Resistor,ptc	#1	0.5 A	83364
	Resistor,ptc	#0	Not used	
	Resistor,ptc	#3	0.5 A	83364
R509	Resistor,chip603	#2	Not used	
	Resistor,chip603	#1	1 Kohm	14102
	Resistor,chip603	#0	Not used	
	Resistor,chip603	#3	Not used	
R510	Resistor,chip603	#2	Not used	
	Resistor,chip603	#1	1 Kohm	14102
	Resistor,chip603	#0	Not used	
	Resistor,chip603	#3	Not used	
R511	Resistor,chip603	#2	Not used	
	Resistor,chip603	#1	47 Kohm	14473
	Resistor,chip603	#0	Not used	
	Resistor,chip603	#3	Not used	
R512	Resistor,chip603	#2	Not used	
	Resistor,chip603	#1	18 Kohm	14183
	Resistor,chip603	#0	Not used	
	Resistor,chip603	#3	Not used	
R513	Resistor,chip603	#2	Not used	

Copyright © 2004

Partlist for Systemboard TRX3001 Date 08-09-2004
Drawing No. 0-3002-03-6 Unit No. 3100

Component	Description		Value	Niros No.
	Resistor,chip603	#1	33 Kohm	14333
	Resistor,chip603	#0	Not used	
	Resistor,chip603	#3	Not used	
R514	Resistor,chip603		100 Kohm	14104
R515	Resistor,chip603	#2	Not used	
	Resistor,chip603	#1	100 Kohm	14104
	Resistor,chip603	#0	Not used	
	Resistor,chip603	#3	Not used	
R516	Resistor,chip603	#2	Not used	
	Resistor,chip603	#1	100 Kohm	14104
	Resistor,chip603	#0	Not used	
	Resistor,chip603	#3	Not used	
R517	Resistor,chip603	#2	Not used	
	Resistor,chip603	#1	100 Kohm	14104
	Resistor,chip603	#0	Not used	
	Resistor,chip603	#3	Not used	
R518	Resistor,chip603	#2	Not used	
	Resistor,chip603	#1	100 Kohm	14104
	Resistor,chip603	#0	Not used	
	Resistor,chip603	#3	Not used	
R519	Resistor,chip603	#2	Not used	
	Resistor,chip603	#1	100 Kohm	14104
	Resistor,chip603	#0	Not used	
	Resistor,chip603	#3	Not used	
R520	Resistor,chip603	#2	Not used	
	Resistor,chip603	#1	100 Kohm	14104
	Resistor,chip603	#0	Not used	
	Resistor,chip603	#3	Not used	
R521	Resistor,chip603	#2	Not used	
	Resistor,chip603	#1	100 Kohm	14104
	Resistor,chip603	#0	Not used	
	Resistor,chip603	#3	Not used	
R522	Resistor,chip603	#2	Not used	
	Resistor,chip603	#1	100 Kohm	14104
	Resistor,chip603	#0	Not used	
	Resistor,chip603	#3	Not used	
R523	Resistor,chip603	#2	Not used	
	Resistor,chip603	#1	120 Kohm	14124
	Resistor,chip603	#0	Not used	
	Resistor,chip603	#3	Not used	
R524	Resistor,chip603	#2	Not used	
	Resistor,chip603	#1	5,6 Kohm	14562
	Resistor,chip603	#0	Not used	
	Resistor,chip603	#3	Not used	
R525	Resistor,chip603	#2	Not used	
	Resistor,chip603	#1	5,6 Kohm	14562
	Resistor,chip603	#0	Not used	
	Resistor,chip603	#3	Not used	

p. 7 of 19 PC. Board No. 779-4

Copyright © 2004

Partlist for Systemboard TRX3001 Date 08-09-2004
Drawing No. 0-3002-03-6 Unit No. 3100

Component	Description		Value	Niros No.
R526	Resistor,chip603	#2	Not used	
	Resistor,chip603	#1	5,6 Kohm	14562
	Resistor,chip603	#0	Not used	
	Resistor,chip603	#3	Not used	
R527	Resistor,chip603	#2	Not used	
	Resistor,chip603	#1	5,6 Kohm	14562
	Resistor,chip603	#0	Not used	
	Resistor,chip603	#3	Not used	
R528	Resistor,chip603	#2	Not used	
	Resistor,chip603	#1	5,6 Kohm	14562
	Resistor,chip603	#0	Not used	
	Resistor,chip603	#3	Not used	
R529	Resistor,chip603	#2	Not used	
	Resistor,chip603	#1	5,6 Kohm	14562
	Resistor,chip603	#0	Not used	
	Resistor,chip603	#3	Not used	
R530	Resistor,chip603	#2	Not used	
	Resistor,chip603	#1	5,6 Kohm	14562
	Resistor,chip603	#0	Not used	
	Resistor,chip603	#3	Not used	
R531	Resistor,chip603	#2	Not used	
	Resistor,chip603	#1	5,6 Kohm	14562
	Resistor,chip603	#0	Not used	
	Resistor,chip603	#3	Not used	
R532	Resistor,chip1206	#2	Not used	
	Resistor,chip1206	#1	180 Ohm	12181
	Resistor,chip1206	#0	Not used	
	Resistor,chip1206	#3	Not used	
R601	Resistor,chip603		1 Kohm	14102
R602	Resistor,chip603		1 Kohm	14102
R603	Resistor,chip603		1 Kohm	14102
R604	Resistor,chip603		1 Kohm	14102
R605	Resistor,chip603		1 Kohm	14102
R606	Resistor,chip603		1 Kohm	14102
R607	Resistor,chip603		1 Kohm	14102
R608	Resistor,chip603		1 Kohm	14102
R609	Resistor,chip603		1 Kohm	14102
R610	Resistor,chip603		1 Kohm	14102
R611	Resistor,chip603		1 Kohm	14102
R612	Resistor,chip603		1 Kohm	14102
R613	Resistor,chip603		1 Kohm	14102
R614	Resistor,chip603		1 Kohm	14102
R615	Resistor,chip603		1 Kohm	14102
R616	Resistor,chip603		Not used	
R617	Resistor,chip603		Not used	
R618	Resistor,chip603		Not used	

p. 8 of 19 PC. Board No. 779-4

Copyright © 2004

Partlist for Systemboard TRX3001 Date 08-09-2004
Drawing No. 0-3002-03-6 Unit No. 3100

Component	Description		Value	Niros No.
R619	Resistor,chip603		Not used	
R620	Resistor,chip603		Not used	
R621	Resistor,chip603		Not used	
R622	Resistor,chip603		Not used	
C101	Capacitor,chip603		47 nF	21473
C102	Capacitor,chip603		47 nF	21473
C103	Capacitor,chip603		47 nF	21473
C104	Capacitor,chip603		15 pF	21150
C105	Capacitor,chip603		15 pF	21150
C106	Capacitor,chip603		47 nF	21473
C107	Capacitor,chip603		47 nF	21473
C108	Capacitor,ctan_a		6,8 uF/10V	25619
C109	Capacitor,chip603		47 nF	21473
C110	Capacitor,chip603	#2	Not used	
	Capacitor,chip603	#1	47 nF	21473
	Capacitor,chip603	#0	Not used	
	Capacitor,chip603	#3	Not used	
C111	Capacitor,ctan_c	#2	Not used	
	Capacitor,ctan_c	#1	68 uF/6V3	25618
	Capacitor,ctan_c	#0	Not used	
	Capacitor,ctan_c	#3	Not used	
C201	Capacitor,chip1206		330 nF	20664
C202	Capacitor,chip1206		330 nF	20664
C203	Capacitor,ctan_a		2,2 uF/16V	25613
C204	Capacitor,ctan_a		6,8 uF/10V	25619
C205	Capacitor,ctan_a		2,2 uF/16V	25613
C206	Capacitor,chip1206		330 nF	20664
C207	Capacitor,chip603		47 nF	21473
C208	Capacitor,ctan_a		2,2 uF/16V	25613
C209	Capacitor,chip603		10 nF	21103
C210	Capacitor,ctan_a		1 uF/20V	25617
C211	Capacitor,chip603		10 nF	21103
C212	Capacitor,ctan_a		2,2 uF/16V	25613
C213	Capacitor,chip603		220 nF	21224
C214	Capacitor,chip603		10 nF	21103
C215	Capacitor,chip603		47 nF	21473
C216	Capacitor,chip603		220 nF	21224
C217	Capacitor,ctan_a	#2	Not used	
	Capacitor,ctan_a	#1	6,8 uF/10V	25619
	Capacitor,ctan_a	#0	Not used	
	Capacitor,ctan_a	#3	Not used	
C218	Capacitor,chip603	#2	Not used	
	Capacitor,chip603	#1	10 nF	21103
	Capacitor,chip603	#0	Not used	
	Capacitor,chip603	#3	Not used	

p. 9 of 19 PC. Board No. 779-4

Copyright © 2004

Partlist for Systemboard TRX3001 Date 08-09-2004
Drawing No. 0-3002-03-6 Unit No. 3100

Component	Description		Value	Niros No.
C219	Capacitor,ctan_a	#2	Not used	
	Capacitor,ctan_a	#1	6,8 uF/10V	25619
	Capacitor,ctan_a	#0	Not used	
	Capacitor,ctan_a	#3	Not used	
C220	Capacitor,ctan_a	#2	Not used	
	Capacitor,ctan_a	#1	6,8 uF/10V	25619
	Capacitor,ctan_a	#0	Not used	
	Capacitor,ctan_a	#3	Not used	
C221	Capacitor,chip603	#2	Not used	
	Capacitor,chip603	#1	10 nF	21103
	Capacitor,chip603	#0	Not used	
	Capacitor,chip603	#3	Not used	
C222	Capacitor,chip1206	#2	Not used	
	Capacitor,chip1206	#1	10 uF	20665
	Capacitor,chip1206	#0	Not used	
	Capacitor,chip1206	#3	Not used	
C301	Capacitor,chip603	#2	22 pF	21220
	Capacitor,chip603	#1	22 pF	21220
	Capacitor,chip603	#0	Not used	
	Capacitor,chip603	#3	Not used	
C302	Capacitor,chip603	#2	22 pF	21220
	Capacitor,chip603	#1	22 pF	21220
	Capacitor,chip603	#0	Not used	
	Capacitor,chip603	#3	Not used	
C303	Capacitor,chip603	#2	100 nF	21104
	Capacitor,chip603	#1	100 nF	21104
	Capacitor,chip603	#0	Not used	
	Capacitor,chip603	#3	Not used	
C304	Capacitor,chip603	#2	220 pF	21221
	Capacitor,chip603	#1	220 pF	21221
	Capacitor,chip603	#0	Not used	
	Capacitor,chip603	#3	Not used	
C305	Capacitor,chip603	#2	100 nF	21104
	Capacitor,chip603	#1	Not used	
	Capacitor,chip603	#0	Not used	
	Capacitor,chip603	#3	Not used	
C306	Capacitor,chip805	#2	220 nF	20663
	Capacitor,chip805	#1	220 nF	20663
	Capacitor,chip805	#0	Not used	
	Capacitor,chip805	#3	Not used	
C307	Capacitor,chip805		100 nF	20654
C308	Capacitor,chip805		100 nF	20654
C309	Capacitor,ctan_a		6,8 uF/10V	25619
C310	Capacitor,ctan_a		2,2 uF/16V	25613
C311	Capacitor,ctan_a		0,68 uF/16V	25611
C312	Capacitor,ctan_b		15 uF/6V3	25606
C313	Capacitor,chip603		1 nF	21102

p. 10 of 19 PC. Board No. 779-4

Copyright © 2004

Partlist for Systemboard TRX3001 Date 08-09-2004
Drawing No. 0-3002-03-6 Unit No. 3100

Component	Description		Value	Niros No.
C314	Capacitor,chip805		100 nF	20654
C315	Capacitor,ctan_a		0,68 uF/16V	25611
C316	Capacitor,chip603		1 nF	21102
C317	Capacitor,chip805		100 nF	20654
C318	Capacitor,chip603		10 nF	21103
C319	Capacitor,chip603		1 nF	21102
C320	Capacitor,ctan_a		2,2 uF/16V	25613
C321	Capacitor,ctan_a		6,8 uF/10V	25619
C322	Capacitor,chip603		1 nF	21102
C323	Capacitor,chip603		Not used	
C324	Capacitor,chip603		22 pF	21220
C325	Capacitor,chip603		Not used	
C326	Capacitor,chip603		10 nF	21103
C327	Capacitor,chip603		1 nF	21102
C328	Capacitor,chip603		1 nF	21102
C329	Capacitor,chip603		4,7 nF	21472
C330	Capacitor,ctan_a		2,2 uF/16V	25613
C331	Capacitor,ctan_a		6,8 uF/10V	25619
C332	Capacitor,chip603		220 pF	21221
C333	Capacitor,chip805		100 nF	20654
C334	Capacitor,chip603	#2	100 nF	21104
	Capacitor,chip603	#1	100 nF	21104
	Capacitor,chip603	#0	Not used	
	Capacitor,chip603	#3	Not used	
C335	Capacitor,ctan_a	#2	6,8 uF/10V	25619
	Capacitor,ctan_a	#1	6,8 uF/10V	25619
	Capacitor,ctan_a	#0	Not used	
	Capacitor,ctan_a	#3	Not used	
C336	Capacitor,chip603	#2	100 nF	21104
	Capacitor,chip603	#1	100 nF	21104
	Capacitor,chip603	#0	Not used	
	Capacitor,chip603	#3	Not used	
C337	Capacitor,chip603	#2	47 nF	21473
	Capacitor,chip603	#1	47 nF	21473
	Capacitor,chip603	#0	Not used	
	Capacitor,chip603	#3	Not used	
C338	Capacitor,chip603	#2	47 nF	21473
	Capacitor,chip603	#1	47 nF	21473
	Capacitor,chip603	#0	Not used	
	Capacitor,chip603	#3	Not used	
C339	Capacitor,chip603	#2	120 pF	21121
	Capacitor,chip603	#1	120 pF	21121
	Capacitor,chip603	#0	Not used	
	Capacitor,chip603	#3	Not used	
C340	Capacitor,chip603	#2	1,5 nF	21152
	Capacitor,chip603	#1	1,5 nF	21152

p. 11 of 19 PC. Board No. 779-4

Copyright © 2004

Partlist for Systemboard TRX3001 Date 08-09-2004
Drawing No. 0-3002-03-6 Unit No. 3100

Component	Description		Value	Niros No.
	Capacitor,chip603	#0	Not used	
	Capacitor,chip603	#3	Not used	
C341	Capacitor,chip603	#2	120 pF	21121
	Capacitor,chip603	#1	120 pF	21121
	Capacitor,chip603	#0	Not used	
	Capacitor,chip603	#3	Not used	
C342	Capacitor,chip603	#2	1,5 nF	21152
	Capacitor,chip603	#1	1,5 nF	21152
	Capacitor,chip603	#0	Not used	
	Capacitor,chip603	#3	Not used	
C343	Capacitor,chip603	#2	220 pF	21221
	Capacitor,chip603	#1	220 pF	21221
	Capacitor,chip603	#0	Not used	
	Capacitor,chip603	#3	Not used	
C344	Capacitor,chip603	#2	100 nF	21104
	Capacitor,chip603	#1	100 nF	21104
	Capacitor,chip603	#0	Not used	
	Capacitor,chip603	#3	Not used	
C401	Capacitor,chip603		100 pF	21101
C402	Capacitor,chip603		47 nF	21473
C403	Capacitor,chip603		100 pF	21101
C404	Capacitor,chip603		1 nF	21102
C405	Capacitor,chip603		1 nF	21102
C406	Capacitor,chip603		1 nF	21102
C407	Capacitor,ctan_a		6,8 uF/10V	25619
C408	Capacitor,chip805		100 nF	20654
C409	Capacitor,chip603		1 nF	21102
C410	Capacitor,chip603		1 nF	21102
C411	Capacitor,chip603		1 nF	21102
C412	Capacitor,chip603		1 nF	21102
C413	Capacitor,chip603		1 nF	21102
C414	Capacitor,chip603		1 nF	21102
C415	Capacitor,chip603		220 pF	21221
C416	Capacitor,chip603		47 nF	21473
C417	Capacitor,chip603		1 nF	21102
C418	Capacitor,chip603		47 nF	21473
C419	Capacitor,chip603		10 nF	21103
C420	Capacitor,chip603		100 pF	21101
C421	Capacitor,chip603		47 nF	21473
C422	Capacitor,chip603		1 nF	21102
C423	Capacitor,ctan_b		22 uF/10V	25630
C501	Capacitor,ctan_a	#2	1 uF/20V	25617
	Capacitor,ctan_a	#1	1 uF/20V	25617
	Capacitor,ctan_a	#0	Not used	
	Capacitor,ctan_a	#3	1 uF/20V	25617

p. 12 of 19 PC. Board No. 779-4

Copyright © 2004

Partlist for Systemboard TRX3001 Date 08-09-2004
Drawing No. 0-3002-03-6 Unit No. 3100

Component	Description		Value	Niros No.
C502	Capacitor,ctan_a	#2	1 uF/20V	25617
	Capacitor,ctan_a	#1	1 uF/20V	25617
	Capacitor,ctan_a	#0	Not used	
	Capacitor,ctan_a	#3	1 uF/20V	25617
C503	Capacitor,ctan_a	#2	1 uF/20V	25617
	Capacitor,ctan_a	#1	1 uF/20V	25617
	Capacitor,ctan_a	#0	Not used	
	Capacitor,ctan_a	#3	1 uF/20V	25617
C504	Capacitor,ctan_a	#2	6,8 uF/10V	25619
	Capacitor,ctan_a	#1	6,8 uF/10V	25619
	Capacitor,ctan_a	#0	Not used	
	Capacitor,ctan_a	#3	6,8 uF/10V	25619
C505	Capacitor,ctan_a	#2	1 uF/20V	25617
	Capacitor,ctan_a	#1	1 uF/20V	25617
	Capacitor,ctan_a	#0	Not used	
	Capacitor,ctan_a	#3	1 uF/20V	25617
C506	Capacitor,chip603	#2	100 pF	21101
	Capacitor,chip603	#1	100 pF	21101
	Capacitor,chip603	#0	Not used	
	Capacitor,chip603	#3	100 pF	21101
C507	Capacitor,chip603	#2	100 pF	21101
	Capacitor,chip603	#1	100 pF	21101
	Capacitor,chip603	#0	Not used	
	Capacitor,chip603	#3	100 pF	21101
C508	Capacitor,chip603	#2	100 pF	21101
	Capacitor,chip603	#1	100 pF	21101
	Capacitor,chip603	#0	Not used	
	Capacitor,chip603	#3	100 pF	21101
C509	Capacitor,chip603	#2	100 pF	21101
	Capacitor,chip603	#1	100 pF	21101
	Capacitor,chip603	#0	Not used	
	Capacitor,chip603	#3	100 pF	21101
C510	Capacitor,chip603	#2	100 pF	21101
	Capacitor,chip603	#1	100 pF	21101
	Capacitor,chip603	#0	Not used	
	Capacitor,chip603	#3	100 pF	21101
C511	Capacitor,chip603	#2	100 pF	21101
	Capacitor,chip603	#1	100 pF	21101
	Capacitor,chip603	#0	Not used	
	Capacitor,chip603	#3	100 pF	21101
C512	Capacitor,chip603	#2	10 nF	21103
	Capacitor,chip603	#1	10 nF	21103
	Capacitor,chip603	#0	Not used	
	Capacitor,chip603	#3	10 nF	21103
C513	Capacitor,chip603	#2	Not used	
	Capacitor,chip603	#1	47 nF	21473
	Capacitor,chip603	#0	Not used	
	Capacitor,chip603	#3	Not used	

p. 13 of 19 PC. Board No. 779-4

Copyright © 2004

Partlist for Systemboard TRX3001 Date 08-09-2004
Drawing No. 0-3002-03-6 Unit No. 3100

Component	Description		Value	Niros No.
C514	Capacitor,chip603	#2	Not used	
	Capacitor,chip603	#1	47 nF	21473
	Capacitor,chip603	#0	Not used	
	Capacitor,chip603	#3	Not used	
C515	Capacitor,chip603	#2	Not used	
	Capacitor,chip603	#1	47 nF	21473
	Capacitor,chip603	#0	Not used	
	Capacitor,chip603	#3	Not used	
C517	Capacitor,chip603	#2	Not used	
	Capacitor,chip603	#1	47 nF	21473
	Capacitor,chip603	#0	Not used	
	Capacitor,chip603	#3	Not used	
C518	Capacitor,chip603	#2	Not used	
	Capacitor,chip603	#1	1 nF	21102
	Capacitor,chip603	#0	Not used	
	Capacitor,chip603	#3	Not used	
C519	Capacitor,chip603	#2	Not used	
	Capacitor,chip603	#1	220 pF	21221
	Capacitor,chip603	#0	Not used	
	Capacitor,chip603	#3	Not used	
C520	Capacitor,chip603	#2	Not used	
	Capacitor,chip603	#1	220 pF	21221
	Capacitor,chip603	#0	Not used	
	Capacitor,chip603	#3	Not used	
C521	Capacitor,chip603	#2	Not used	
	Capacitor,chip603	#1	220 pF	21221
	Capacitor,chip603	#0	Not used	
	Capacitor,chip603	#3	Not used	
C522	Capacitor,chip603	#2	Not used	
	Capacitor,chip603	#1	220 pF	21221
	Capacitor,chip603	#0	Not used	
	Capacitor,chip603	#3	Not used	
C523	Capacitor,chip603	#2	Not used	
	Capacitor,chip603	#1	220 pF	21221
	Capacitor,chip603	#0	Not used	
	Capacitor,chip603	#3	Not used	
C524	Capacitor,chip603	#2	Not used	
	Capacitor,chip603	#1	220 pF	21221
	Capacitor,chip603	#0	Not used	
	Capacitor,chip603	#3	Not used	
C525	Capacitor,chip603	#2	Not used	
	Capacitor,chip603	#1	220 pF	21221
	Capacitor,chip603	#0	Not used	
	Capacitor,chip603	#3	Not used	
C526	Capacitor,chip603	#2	Not used	
	Capacitor,chip603	#1	220 pF	21221
	Capacitor,chip603	#0	Not used	
	Capacitor,chip603	#3	Not used	

Copyright © 2004

Partlist for Systemboard TRX3001 Date 08-09-2004
Drawing No. 0-3002-03-6 Unit No. 3100

Component	Description		Value	Niros No.
C527	Capacitor,chip603	#2	Not used	
	Capacitor,chip603	#1	100 pF	21101
	Capacitor,chip603	#0	Not used	
	Capacitor,chip603	#3	Not used	
C528	Capacitor,chip603	#2	Not used	
	Capacitor,chip603	#1	100 pF	21101
	Capacitor,chip603	#0	Not used	
	Capacitor,chip603	#3	Not used	
C529	Capacitor,chip603	#2	Not used	
	Capacitor,chip603	#1	100 pF	21101
	Capacitor,chip603	#0	Not used	
	Capacitor,chip603	#3	Not used	
C530	Capacitor,chip603	#2	Not used	
	Capacitor,chip603	#1	100 pF	21101
	Capacitor,chip603	#0	Not used	
	Capacitor,chip603	#3	Not used	
C531	Capacitor,chip603	#2	Not used	
	Capacitor,chip603	#1	100 pF	21101
	Capacitor,chip603	#0	Not used	
	Capacitor,chip603	#3	Not used	
C532	Capacitor,chip603	#2	Not used	
	Capacitor,chip603	#1	100 pF	21101
	Capacitor,chip603	#0	Not used	
	Capacitor,chip603	#3	Not used	
C533	Capacitor,chip603	#2	Not used	
	Capacitor,chip603	#1	100 pF	21101
	Capacitor,chip603	#0	Not used	
	Capacitor,chip603	#3	Not used	
C534	Capacitor,chip603	#2	Not used	
	Capacitor,chip603	#1	100 pF	21101
	Capacitor,chip603	#0	Not used	
	Capacitor,chip603	#3	Not used	
C601	Capacitor,chip603		Not used	
C602	Capacitor,chip603		Not used	
X101	Crystal		16 MHz	31205
X102	Crystal	#2	Not used	
	Crystal	#1	32.768 KHz	31187
	Crystal	#0	Not used	
	Crystal	#3	Not used	
X301	Crystal	#2	4.032 MHz	31201
	Crystal	#1	4.032 MHz	31201
	Crystal	#0	Not used	
	Crystal	#3	Not used	
T201	Transistor		BCW61D	40157

p. 15 of 19 PC. Board No. 779-4

Copyright © 2004

Partlist for Systemboard TRX3001 Date 08-09-2004
Drawing No. 0-3002-03-6 Unit No. 3100

Component	Description		Value	Niros No.
T202	Transistor		BCW60D	40156
T203	Transistor		DTC144EUA	40209
T204	Transistor		DTA144EUA	40208
T205	Transistor		DTC144EUA	40209
T206	Transistor		SI4953DY	40202
T207	Transistor		DTC144EUA	40209
T401	Transistor		BCW61D	40157
T402	Transistor		DTC144EUA	40209
T403	Transistor		BCW60D	40156
T404	Transistor		BCW60D	40156
T405	Transistor		DTC144EUA	40209
T501	Transistor	#2	DTC144EUA	40209
	Transistor	#1	DTC144EUA	40209
	Transistor	#0	Not used	
	Transistor	#3	DTC144EUA	40209
T502	Transistor	#2	Not used	
	Transistor	#1	BC807-40	40186
	Transistor	#0	Not used	
	Transistor	#3	Not used	
T503	Transistor	#2	Not used	
	Transistor	#1	DTC144EUA	40209
	Transistor	#0	Not used	
	Transistor	#3	Not used	
D101	Diode	#2	Not used	
	Diode	#1	BAV99	45148
	Diode	#0	Not used	
	Diode	#3	Not used	
D201	Diode,zener		BZX84C13	41243
D202	Diode		BAV99	45148
D203	Diode		BAV99	45148
D204	Diode		BAV99	45148
D205	Diode		BAT54S	45173
D301	Diode		BAV99	45148
D401	Diode,zener		BZM55C6V2	41250
D402	Diode,zener		BZM55C6V2	41250
D403	Diode		BAT54S	45173
D404	Diode,zener		BZM55C6V2	41250
D501	Diode	#2	BYS10-45	45186
	Diode	#1	BYS10-45	45186
	Diode	#0	Not used	
	Diode	#3	BYS10-45	45186
D502	Diode	#2	BYS10-45	45186
	Diode	#1	BYS10-45	45186
	Diode	#0	Not used	
	Diode	#3	BYS10-45	45186

p. 16 of 19 PC. Board No. 779-4

Copyright © 2004

Partlist for Systemboard TRX3001 Date 08-09-2004
Drawing No. 0-3002-03-6 Unit No. 3100

Component	Description		Value	Niros No.
D503	Diode	#2	Not used	
	Diode	#1	BAT54S	45173
	Diode	#0	Not used	
	Diode	#3	Not used	
IC101	Integrated_circuit		24E32	46518
IC102	Integrated_circuit		HM62256FP	46262
IC103	Integrated_circuit		SST28SF040	46535
IC104	Integrated_circuit		74HC259	46528
IC105	Integrated_circuit		HD64F3048F16	46534
IC106	Integrated_circuit		74HC259	46528
IC107	Integrated_circuit	#2	Not used	
	Integrated_circuit	#1	MK41T56S00	46536
	Integrated_circuit	#0	Not used	
	Integrated_circuit	#3	Not used	
IC108	Integrated_circuit		Not used	
IC109	Integrated_circuit		Not used	
IC110	Integrated_circuit		TC7S32F	46252
IC111	Integrated_circuit		TC7S32F	46252
IC201	Integrated_circuit		7808	46066
IC202	Integrated_circuit		78M05	46530
IC203	Integrated_circuit		LP2951	46531
IC204	Integrated_circuit		4093BT	46082
IC205	Integrated_circuit		SCI7700Y	46256
IC206	Integrated_circuit		TC4S584F	46207
IC207	Integrated_circuit		TC4S81F	46532
IC208	Integrated_circuit		Not used	
IC209	Integrated_circuit	#2	Not used	
	Integrated_circuit	#1	LP2951	46531
	Integrated_circuit	#0	Not used	
	Integrated_circuit	#3	Not used	
IC210	Integrated_circuit	#2	Not used	
	Integrated_circuit	#1	ILC7081AIM5-33	46545
	Integrated_circuit	#0	Not used	
	Integrated_circuit	#3	Not used	
IC301	Integrated_circuit	#2	FX829D2	46511
	Integrated_circuit	#1	FX829D2	46511
	Integrated_circuit	#0	Not used	
	Integrated_circuit	#3	Not used	
IC302	Integrated_circuit		TC4S66F	46250
IC303	Integrated_circuit		FX805LS	46265
IC304	Integrated_circuit		FX806LS	46264
IC305	Integrated_circuit		FX803LS	46263
IC306	Integrated_circuit		TC4S66F	46250
IC401	Integrated_circuit		40106BT	46116

p. 17 of 19 PC. Board No. 779-4

Copyright © 2004

Partlist for Systemboard TRX3001 Date 08-09-2004
Drawing No. 0-3002-03-6 Unit No. 3100

Component	Description		Value	Niros No.
IC501	Integrated_circuit	#2	MAX241EEWI	46509
	Integrated_circuit	#1	MAX241EEWI	46509
	Integrated_circuit	#0	Not used	
	Integrated_circuit	#3	MAX241EEWI	46509
IC502	Integrated_circuit	#2	EP1K10	46607
	Integrated_circuit	#1	EP1K10	46607
	Integrated_circuit	#0	Not used	
	Integrated_circuit	#3	Not used	
IC503	Integrated_circuit	#2	Not used	
	Integrated_circuit	#1	U6803B-FP	46529
	Integrated_circuit	#0	Not used	
	Integrated_circuit	#3	Not used	
IC504	Integrated_circuit	#2	Not used	
	Integrated_circuit	#1	U6803B-FP	46529
	Integrated_circuit	#0	Not used	
	Integrated_circuit	#3	Not used	
IC505	Integrated_circuit	#2	Not used	
	Integrated_circuit	#1	U6803B-FP	46529
	Integrated_circuit	#0	Not used	
	Integrated_circuit	#3	Not used	
L401	Coil,chip1206		75938	75938
L402	Coil,chip		75883	75883
L403	Coil,chip1206		75938	75938
L601	Coil,chip1206		75938	75938
L602	Coil,chip1206		75938	75938
L603	Coil,chip1206		75938	75938
L604	Coil,chip1206		75938	75938
J1	Connector_8pol			83368
J2	Connector_8pol			83368
J3	Connector_8pol	#2		83368
	Connector_8pol	#1		83368
	Connector_8pol	#0	Not used	
	Connector_8pol	#3		83368
J4	Connector_8pol	#2		83368
	Connector_8pol	#1		83368
	Connector_8pol	#0	Not used	
	Connector_8pol	#3	Not used	
JR1	Connector_25pol			83366
JE1	Connector_25pol			83366
JO1	Connector_12pol			83317
JE2	Connector_25pol			83366
JO2	Connector_12pol			83317

p. 18 of 19 PC. Board No. 779-4

Copyright © 2004

Partlist for Systemboard TRX3001 Date 08-09-2004
Drawing No. 0-3002-03-6 Unit No. 3100

Component	Description	Value	Niros No.
JE3	Connector_25pol		83366
V1	Resistor,chip1206 #2	470 Ohm	12471
	Resistor,chip1206 #1	220 Ohm	12221
	Resistor,chip1206 #0	100 Ohm	12101
	Resistor,chip1206 #3	1 Kohm	12102
V2	Resistor,chip1206 #2	470 Ohm	12471
	Resistor,chip1206 #1	220 Ohm	12221
	Resistor,chip1206 #0	100 Ohm	12101
	Resistor,chip1206 #3	1 Kohm	12102
	Pc._board_no. 779-4	1 pcs	95779

p. 19 of 19 PC. Board No. 779-4

Copyright © 2004

8. Front unit TRX3001

Copyright © 2004

8.1 Diagram

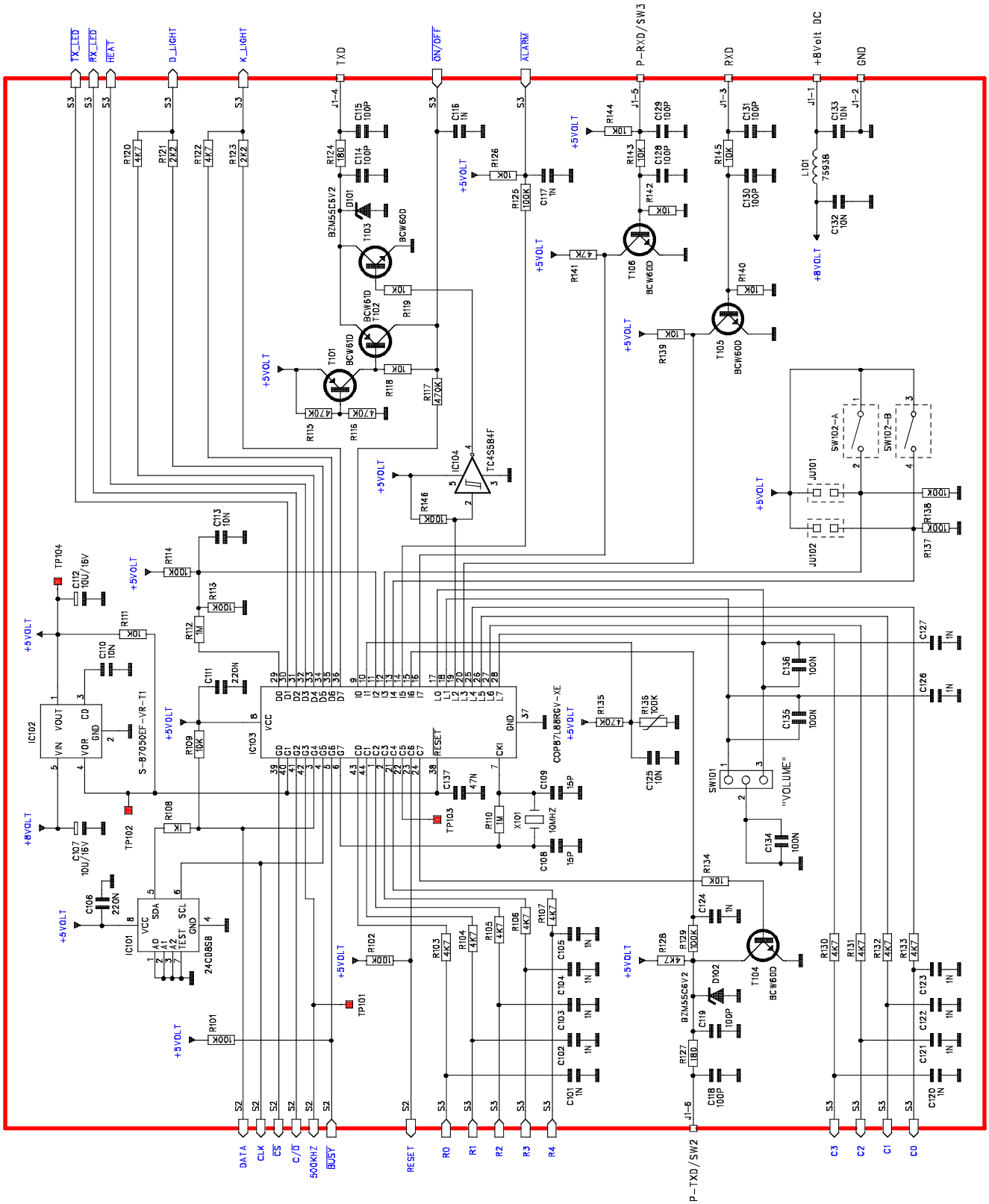

SUBJECT TO CHANGE WITHOUT NOTICE

Date: 03-09-2004 Sign: PH	3	NIROS COMMUNICATIONS A/S Hirsemarken 5, 3520 Farum	Front unit TRX3001
Date: Sign:			
Drawing No.: 0-3001-03-3 p 1 of 3		PC. Board No.: 777-3	Unit No.: 3050

Copyright © 2004

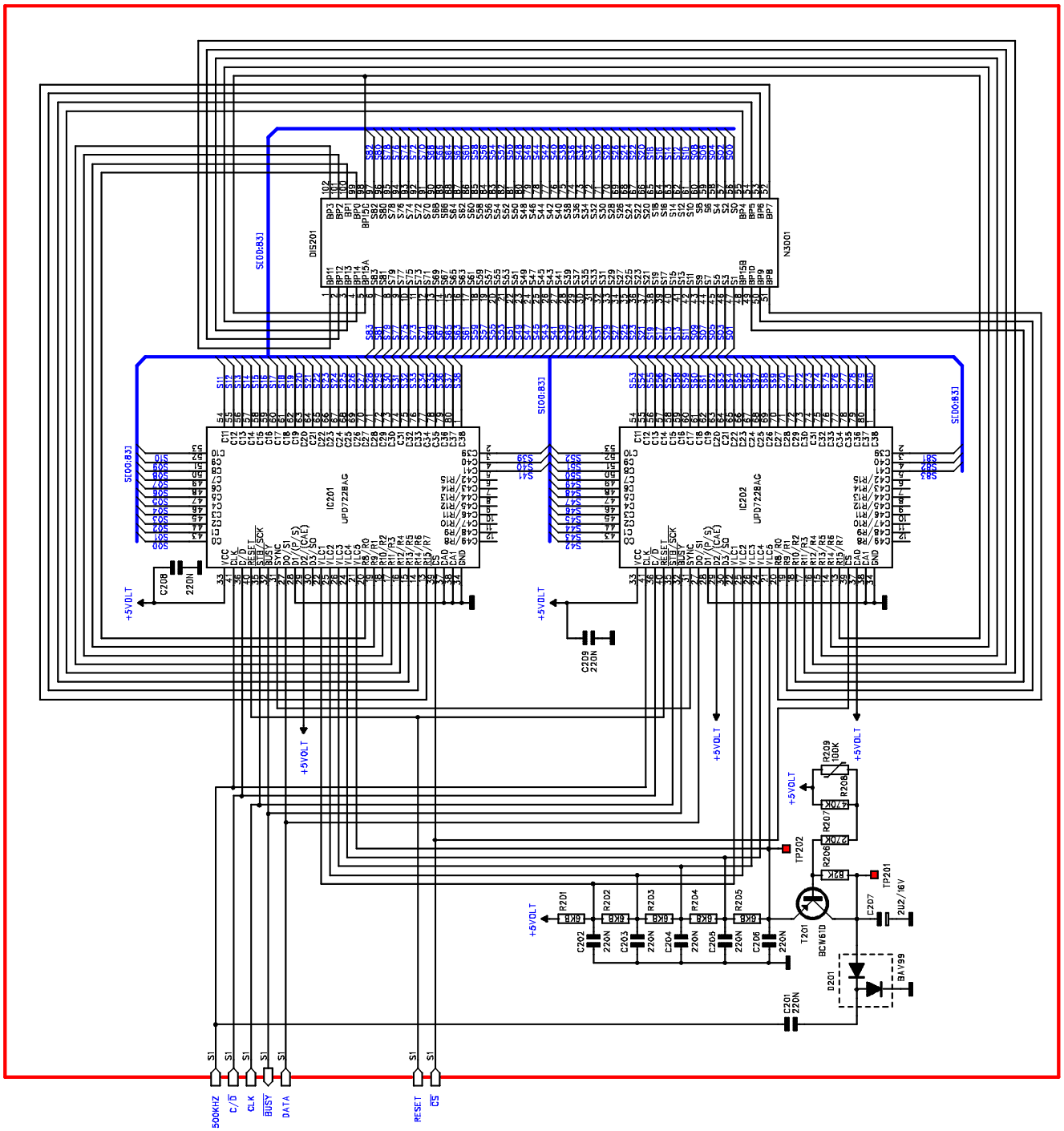

SUBJECT TO CHANGE WITHOUT NOTICE

Date: 03-09-2004 Sign: PH	3	NIROS COMMUNICATIONS A/S Hirsemarken 5, 3520 Farum	Front unit TRX3001	
Date: Sign:				
Drawing No.: 0-3001-03-3 p 2 of 3		PC. Board No.: 777-3	Unit No.: 3050	

Copyright © 2004

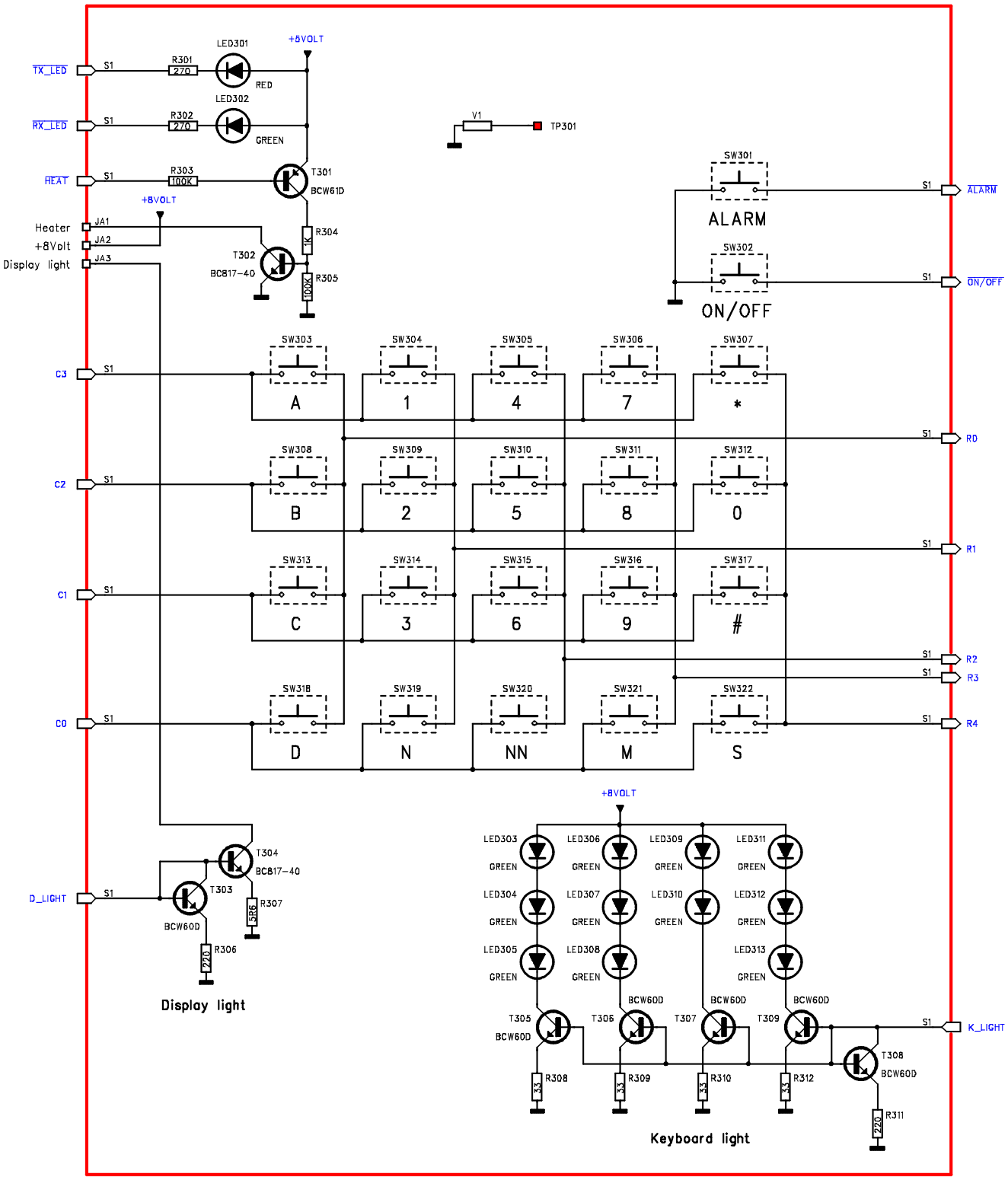

SUBJECT TO CHANGE WITHOUT NOTICE

Date: 03-09-2004 Sign: PH	3	NIROS COMMUNICATIONS A/S Hirsemarken 5, 3520 Farum	Front unit TRX3001	
Date: Sign:				
Drawing No.: 0-3001-03-3 p 3 of 3		PC. Board No.: 777-3	Unit No.: 3050	

Copyright © 2004

8.2 Componentside

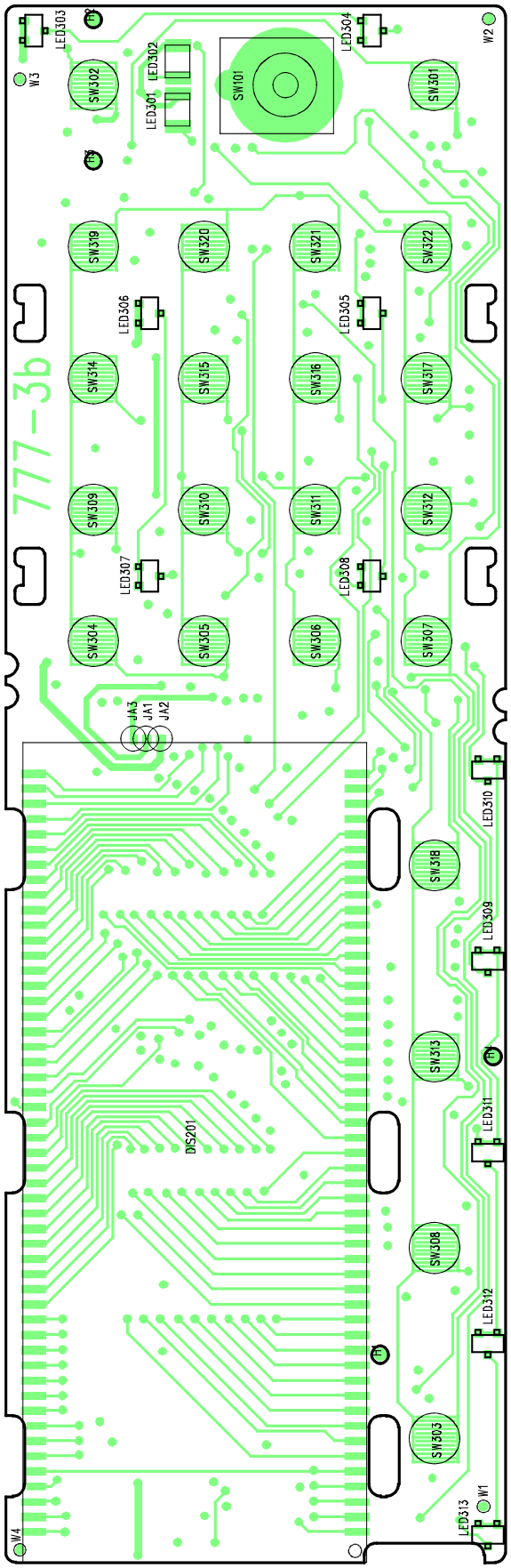

SUBJECT TO CHANGE WITHOUT NOTICE

Date: 03-09-2004 Sign: PH Date: Sign:	3	NIROS COMMUNICATIONS A/S Hirsemarken 5, 3520 Farum	Front unit TRX3001
Drawing No.: 0-3001-05-3		PC. Board No.: 777-3	Unit No.: 3050

8.3 Wiringside

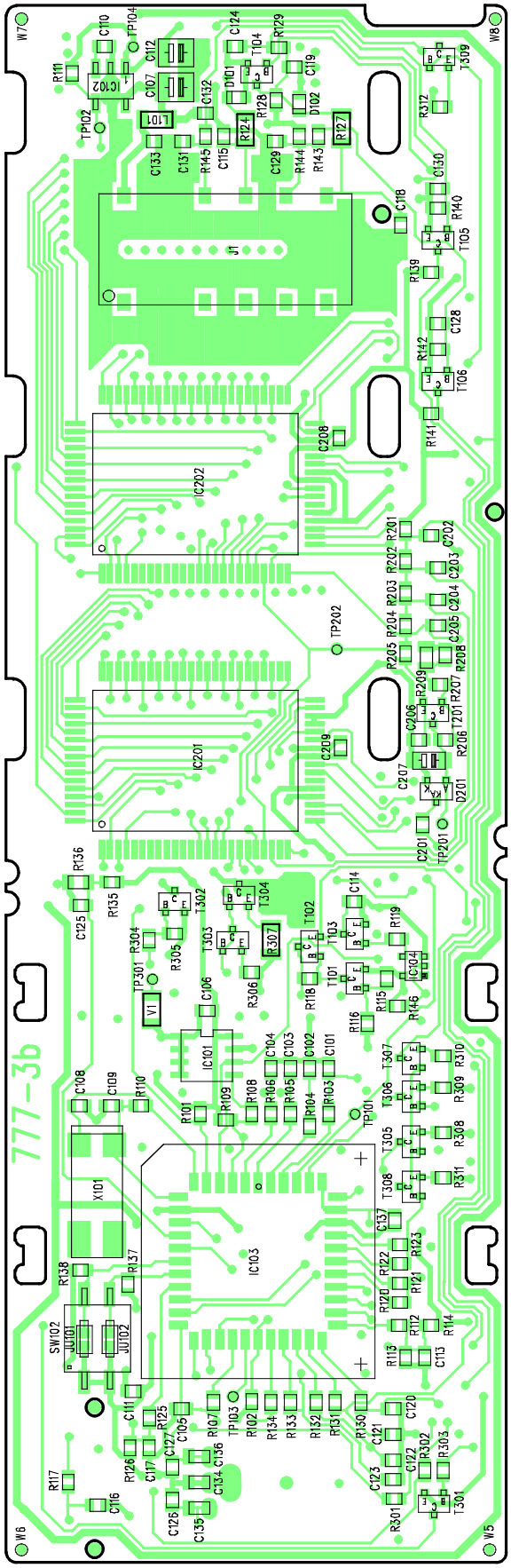

SUBJECT TO CHANGE WITHOUT NOTICE

Date: 03-09-2004 Sign: PH	3	NIROS COMMUNICATIONS A/S Hirsemarken 5, 3520 Farum	Front unit TRX3001
Date: Sign:			
Drawing No.: 0-3001-04-3		PC. Board No.: 777-3	Unit No.: 3050

Copyright © 2004

8.4 Partlist

Partlist for Front unit TRX3001 Date 03-09-2004
Drawing No. 0-3001-03-3 Unit No. 3050

Component	Description	Value	Niros No.
R101	Resistor,chip603	100 Kohm	14104
R102	Resistor,chip603	100 Kohm	14104
R103	Resistor,chip603	4,7 Kohm	14472
R104	Resistor,chip603	4,7 Kohm	14472
R105	Resistor,chip603	4,7 Kohm	14472
R106	Resistor,chip603	4,7 Kohm	14472
R107	Resistor,chip603	4,7 Kohm	14472
R108	Resistor,chip603	1 Kohm	14102
R109	Resistor,chip603	10 Kohm	14103
R110	Resistor,chip603	1 Mohm	14105
R111	Resistor,chip603	10 Kohm	14103
R112	Resistor,chip603	1 Mohm	14105
R113	Resistor,chip603	100 Kohm	14104
R114	Resistor,chip603	100 Kohm	14104
R115	Resistor,chip603	470 Kohm	14474
R116	Resistor,chip603	470 Kohm	14474
R117	Resistor,chip603	470 Kohm	14474
R118	Resistor,chip603	10 Kohm	14103
R119	Resistor,chip603	10 Kohm	14103
R120	Resistor,chip603	4,7 Kohm	14472
R121	Resistor,chip603	2,2 Kohm	14222
R122	Resistor,chip603	4,7 Kohm	14472
R123	Resistor,chip603	2,2 Kohm	14222
R124	Resistor,chip1206	180 Ohm	12181
R125	Resistor,chip603	100 Kohm	14104
R126	Resistor,chip603	10 Kohm	14103
R127	Resistor,chip1206	180 Ohm	12181
R128	Resistor,chip603	4,7 Kohm	14472
R129	Resistor,chip603	100 Kohm	14104
R130	Resistor,chip603	4,7 Kohm	14472
R131	Resistor,chip603	4,7 Kohm	14472
R132	Resistor,chip603	4,7 Kohm	14472
R133	Resistor,chip603	4,7 Kohm	14472
R134	Resistor,chip603	10 Kohm	14103
R135	Resistor,chip603	470 Kohm	14474
R136	Resistor,ntc	100 Kohm	11010
R137	Resistor,chip603	100 Kohm	14104
R138	Resistor,chip603	100 Kohm	14104
R139	Resistor,chip603	10 Kohm	14103
R140	Resistor,chip603	10 Kohm	14103
R141	Resistor,chip603	47 Kohm	14473
R142	Resistor,chip603	10 Kohm	14103
R143	Resistor,chip603	10 Kohm	14103
R144	Resistor,chip603	10 Kohm	14103
R145	Resistor,chip603	10 Kohm	14103

p. 1 of 4 PC. Board No. 777-3

Copyright © 2004

Partlist for Front unit TRX3001 Date 03-09-2004
Drawing No. 0-3001-03-3 Unit No. 3050

Component	Description	Value	Niros No.
R146	Resistor,chip603	100 Kohm	14104
R201	Resistor,chip603	6,8 Kohm	14682
R202	Resistor,chip603	6,8 Kohm	14682
R203	Resistor,chip603	6,8 Kohm	14682
R204	Resistor,chip603	6,8 Kohm	14682
R205	Resistor,chip603	6,8 Kohm	14682
R206	Resistor,chip603	82 Kohm	14823
R207	Resistor,chip603	270 Kohm	14274
R208	Resistor,chip603	470 Kohm	14474
R209	Resistor,ntc	100 Kohm	11010
R301	Resistor,chip603	270 Ohm	14271
R302	Resistor,chip603	270 Ohm	14271
R303	Resistor,chip603	100 Kohm	14104
R304	Resistor,chip603	1 Kohm	14102
R305	Resistor,chip603	100 Kohm	14104
R306	Resistor,chip603	220 Ohm	14221
R307	Resistor,chip1206	5,6 Ohm	12569
R308	Resistor,chip603	33 Ohm	14330
R309	Resistor,chip603	33 Ohm	14330
R310	Resistor,chip603	33 Ohm	14330
R311	Resistor,chip603	220 Ohm	14221
R312	Resistor,chip603	33 Ohm	14330
C101	Capacitor,chip603	1 nF	21102
C102	Capacitor,chip603	1 nF	21102
C103	Capacitor,chip603	1 nF	21102
C104	Capacitor,chip603	1 nF	21102
C105	Capacitor,chip603	1 nF	21102
C106	Capacitor,chip603	220 nF	21224
C107	Capacitor,ctan_b	10 uF/16V	25622
C108	Capacitor,chip603	15 pF	21150
C109	Capacitor,chip603	15 pF	21150
C110	Capacitor,chip603	10 nF	21103
C111	Capacitor,chip603	220 nF	21224
C112	Capacitor,ctan_b	10 uF/16V	25622
C113	Capacitor,chip603	10 nF	21103
C114	Capacitor,chip603	100 pF	21101
C115	Capacitor,chip603	100 pF	21101
C116	Capacitor,chip603	1 nF	21102
C117	Capacitor,chip603	1 nF	21102
C118	Capacitor,chip603	100 pF	21101
C119	Capacitor,chip603	100 pF	21101
C120	Capacitor,chip603	1 nF	21102
C121	Capacitor,chip603	1 nF	21102

Copyright © 2004

Partlist for Front unit TRX3001 Date 03-09-2004
Drawing No. 0-3001-03-3 Unit No. 3050

Component	Description	Value	Niros No.
C122	Capacitor,chip603	1 nF	21102
C123	Capacitor,chip603	1 nF	21102
C124	Capacitor,chip603	1 nF	21102
C125	Capacitor,chip603	10 nF	21103
C126	Capacitor,chip603	1 nF	21102
C127	Capacitor,chip603	1 nF	21102
C128	Capacitor,chip603	100 pF	21101
C129	Capacitor,chip603	100 pF	21101
C130	Capacitor,chip603	100 pF	21101
C131	Capacitor,chip603	100 pF	21101
C132	Capacitor,chip603	10 nF	21103
C133	Capacitor,chip603	10 nF	21103
C134	Capacitor,chip805	100 nF	20654
C135	Capacitor,chip805	100 nF	20654
C136	Capacitor,chip805	100 nF	20654
C137	Capacitor,chip603	47 nF	21473
C201	Capacitor,chip603	220 nF	21224
C202	Capacitor,chip603	220 nF	21224
C203	Capacitor,chip603	220 nF	21224
C204	Capacitor,chip603	220 nF	21224
C205	Capacitor,chip603	220 nF	21224
C206	Capacitor,chip603	220 nF	21224
C207	Capacitor,ctan_a	2,2 uF/16V	25613
C208	Capacitor,chip603	220 nF	21224
C209	Capacitor,chip603	220 nF	21224
X101	Crystal	10 MHz	31202
T101	Transistor	BCW61D	40157
T102	Transistor	BCW61D	40157
T103	Transistor	BCW60D	40156
T104	Transistor	BCW60D	40156
T105	Transistor	BCW60D	40156
T106	Transistor	BCW60D	40156
T201	Transistor	BCW61D	40157
T301	Transistor	BCW61D	40157
T302	Transistor	BC817-40	40180
T303	Transistor	BCW60D	40156
T304	Transistor	BC817-40	40180
T305	Transistor	BCW60D	40156
T306	Transistor	BCW60D	40156
T307	Transistor	BCW60D	40156
T308	Transistor	BCW60D	40156
T309	Transistor	BCW60D	40156

p. 3 of 4 PC. Board No. 777-3

Copyright © 2004

Partlist for Front unit TRX3001 Date 03-09-2004
Drawing No. 0-3001-03-3 Unit No. 3050

Component	Description	Value	Niros No.
D101	Diode,zener	BZM55C6V2	41250
D102	Diode,zener	BZM55C6V2	41250
D201	Diode	BAV99	45148
LED301	Light_diode	RED	45189
LED302	Light_diode	GREEN	45198
LED303	Light_diode,chip	GREEN	45190
LED304	Light_diode,chip	GREEN	45190
LED305	Light_diode,chip	GREEN	45190
LED306	Light_diode,chip	GREEN	45190
LED307	Light_diode,chip	GREEN	45190
LED308	Light_diode,chip	GREEN	45190
LED309	Light_diode,chip	GREEN	45190
LED310	Light_diode,chip	GREEN	45190
LED311	Light_diode,chip	GREEN	45190
LED312	Light_diode,chip	GREEN	45190
LED313	Light_diode,chip	GREEN	45190
IC101	Integrated_circuit	24C08S8	46297
IC102	Integrated_circuit	S-87050EF-VR-T1	46507
IC103	Ic_socket_44pin_for	COP87L88RGV-XE	83352
IC104	Integrated_circuit	TC4S584F	46207
IC201	Integrated_circuit	UPD7228AG	46266
IC202	Integrated_circuit	UPD7228AG	46266
L101	Coil,chip1206	75938	75938
SW101	Switch		81207
SW102	Switch	Not used	
J1	Connector		83372
V1	Resistor,chip1206	270 Ohm	12271
	Ic: COP87L88RGV-XE	1 pcs	46559
	Pc._board_no. 777-3	1 pcs	95777
	Membrane_switch	1 pcs	98153

p. 4 of 4 PC. Board No. 777-3

Copyright © 2004

9. Connection board TRX3001

Copyright © 2004

9.1 Diagram

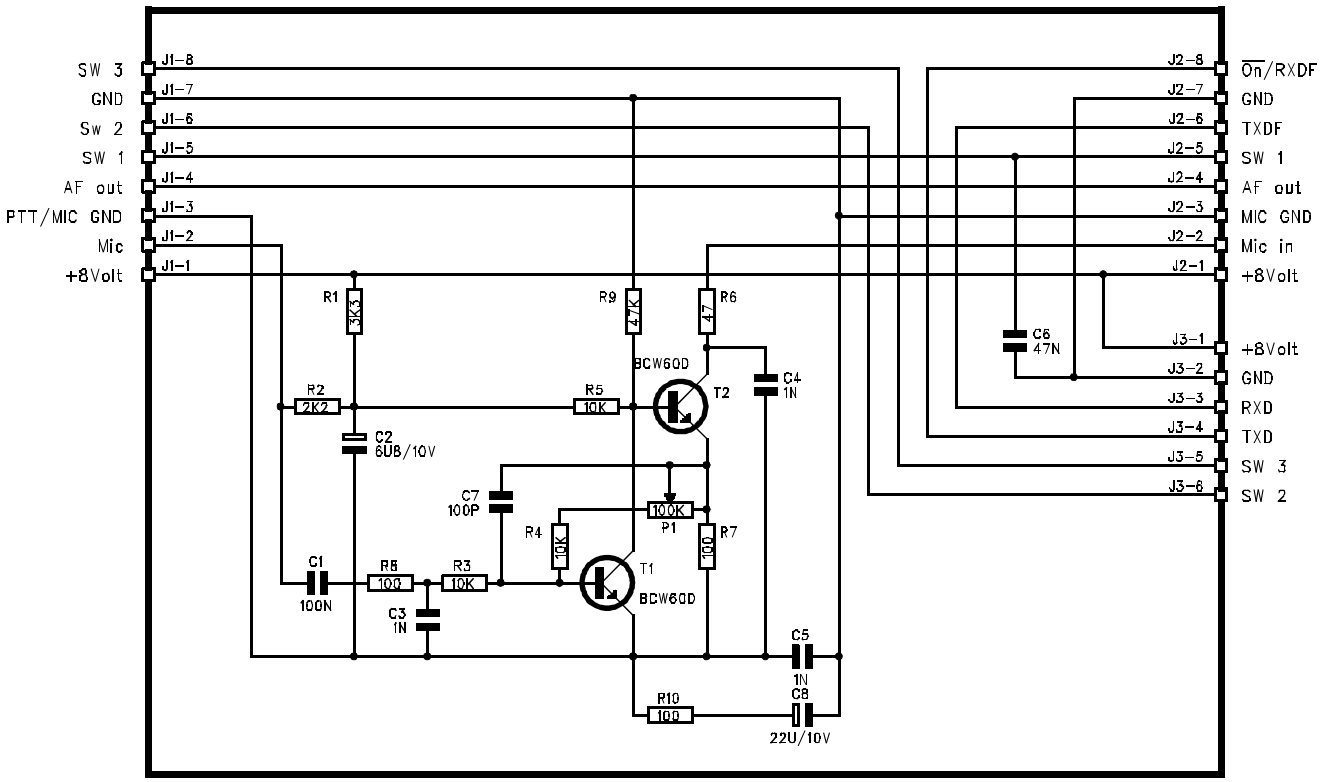

SUBJECT TO CHANGE WITHOUT NOTICE

DATE: 9-6-98	SIGN: PH	2	NIROS TELECOMMUNICATION A/S HIRSEMARKEN 5, 3520 FARUM
DATE: 29-7-98	SIGN: PH	4	
DATE:	SIGN:		
DATE:	SIGN:		Connection board TRX3001
DATE:	SIGN:		
DATE:	SIGN:		
DRAWING NO: 0-3003-03-4			PCB NO: 780-4 UNIT NO: 3070

Copyright © 2004

9.2 Componentside

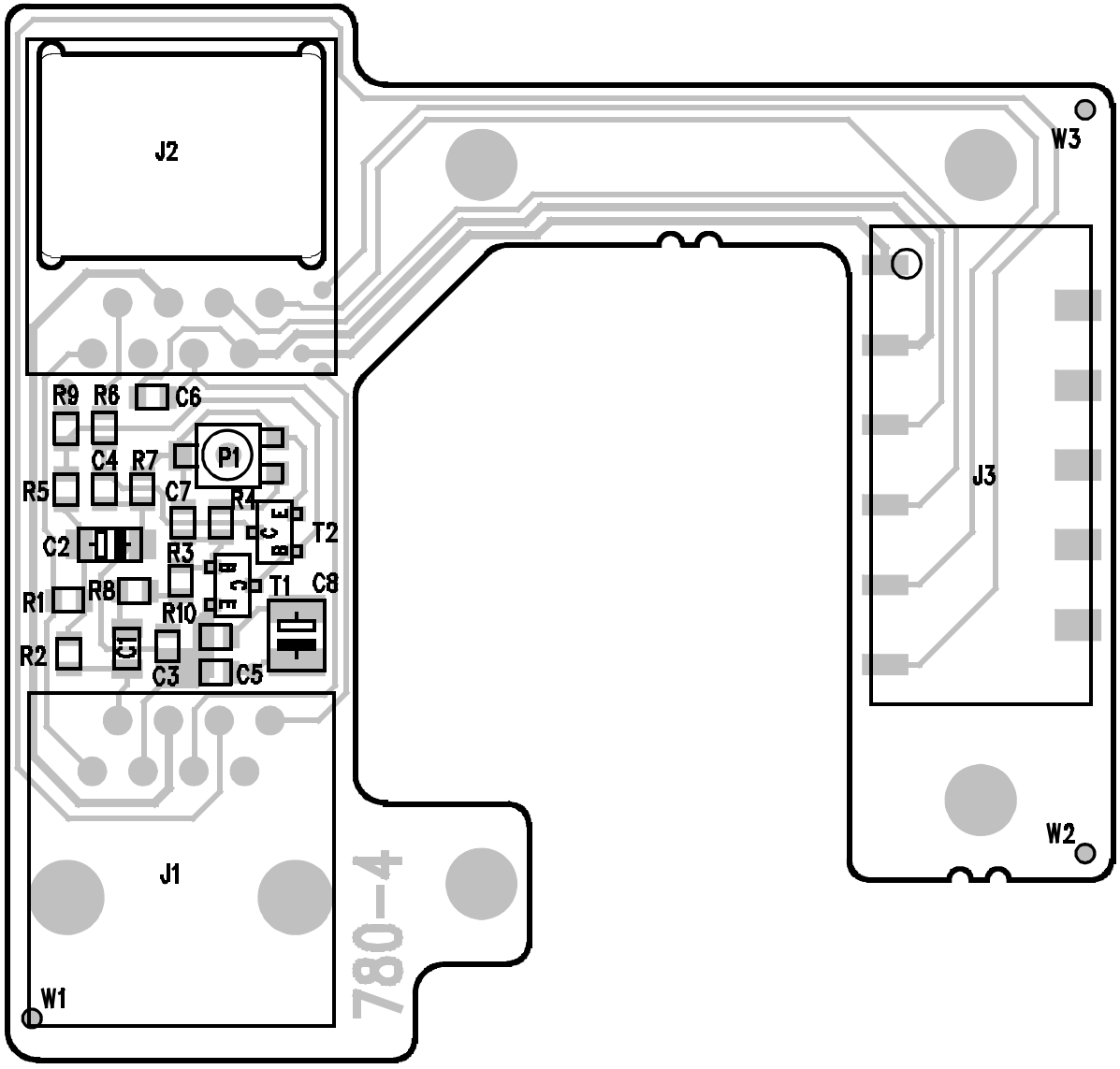

Componentside 780-4

SUBJECT TO CHANGE WITHOUT NOTICE

DATE: 9-6-98	SIGN: PH	2	NIROS TELECOMMUNICATION A/S HIRSEMARKEN 5, 3520 FARUM
DATE: 29-7-98	SIGN: PH	4	
DATE:	SIGN:		
DATE:	SIGN:		Connection board TRX3001
DATE:	SIGN:		
DATE:	SIGN:		
DRAWING NO: 0-3003-05-4			PCB NO: 780-4 UNIT NO: 3070

Copyright © 2004

9.3 Partlist

PARTLIST FOR Connection board TRX3001 DATE 28-7-98
DRAWING NO. 0-3003-03-4 UNIT NO. 3070

Component	Description	Value	Niros No.
R1	Resistor,chip603	3,3 Kohm	14332
R2	Resistor,chip603	2,2 Kohm	14222
R3	Resistor,chip603	10 Kohm	14103
R4	Resistor,chip603	10 Kohm	14103
R5	Resistor,chip603	10 Kohm	14103
R6	Resistor,chip603	47 Ohm	14470
R7	Resistor,chip603	100 Ohm	14101
R8	Resistor,chip603	100 Ohm	14101
R9	Resistor,chip603	47 Kohm	14473
R10	Resistor,chip603	100 Ohm	14101
P1	Resistor,pre_set	100 Kohm	19050
C1	Capacitor,chip805	100 nF	20654
C2	Capacitor,ctan_a	6,8 uF/10V	25619
C3	Capacitor,chip603	1 nF	21102
C4	Capacitor,chip603	1 nF	21102
C5	Capacitor,chip603	1 nF	21102
C6	Capacitor,chip603	47 nF	21473
C7	Capacitor,chip603	100 pF	21101
C8	Capacitor,ctan_b	22 uF/10V	25630
T1	Transistor	BCW60D	40156
T2	Transistor	BCW60D	40156
J1	Connector		83370
J2	Connector		83369
J3	Connector		83371
	Pc._board_no. 780-4	1 pcs	95780

p. 1 of 1 PC. Board No. 780-4

Copyright © 2004

10. Radioboard TRX3001B

Copyright © 2004

10.1 Diagram

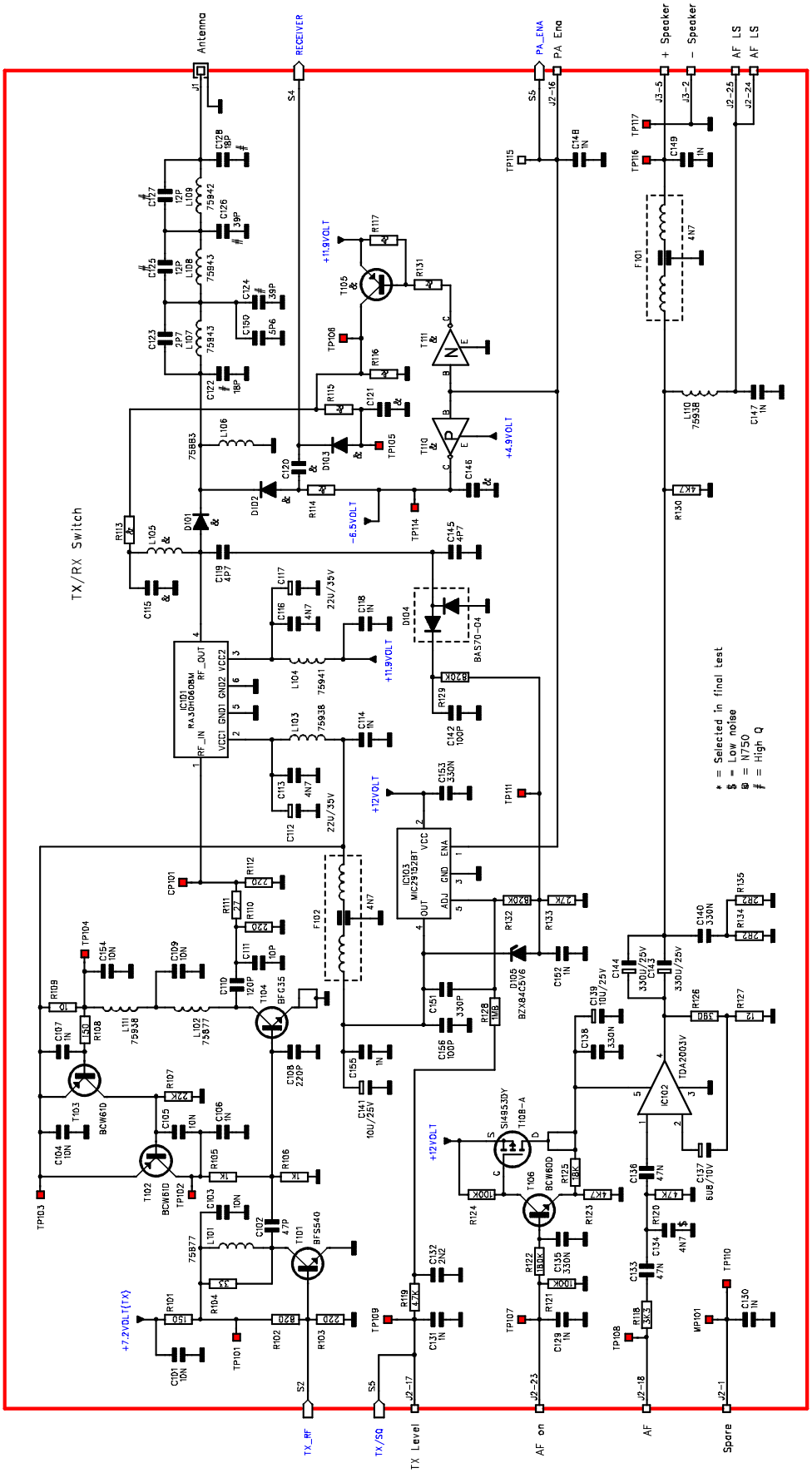

&	Simplex	Duplex	SimplexBase
R113	270	Not used	270
R114	2K7	Not used	2K7
R115	2K2	Not used	2K2
R116	10K	Not used	10K
R117	10K	Not used	10K
R131	10K	Not used	10K
C115	1n	Not used	1n
C120	1n	Not used	1n
C121	1n	Not used	1n
C146	1n	Not used	1n
T105	BCW61D	Not used	BCW61D
T110	DTA144EUA	Not used	DTA144EUA
T111	DTC144EUA	Not used	DTC144EUA
D101	MA4P1250	0 Ohm	MA4P1250
D102	MA4P1250	Not used	MA4P1250
D103	BA682	Not used	BA682
L105	75833	Not used	75833

	SIMPLEX	DUPLEX	SIMPLEX BASE
25KHz	Unit No.: 3004	Unit No.: 3204	Unit No.: 3304
12,5KHz	Unit No.: 3005	Unit No.: 3205	Unit No.: 3305
SW	Unit No.: 3014	Unit No.: 3214	Unit No.: 3314

SUBJECT TO CHANGE WITHOUT NOTICE

Date: 04-08-2003 Sign: HEK	10	NIROS COMMUNICATIONS A/S Hirsemarken 5, 3520 Farum	Radioboard TRX3001B/TRDX3001B
Date: 20-08-2004 Sign: PH	11		
Drawing No.: 0-3000-03-11 p 1 of 5		PC. Board No.: 776-8	

Copyright © 2004

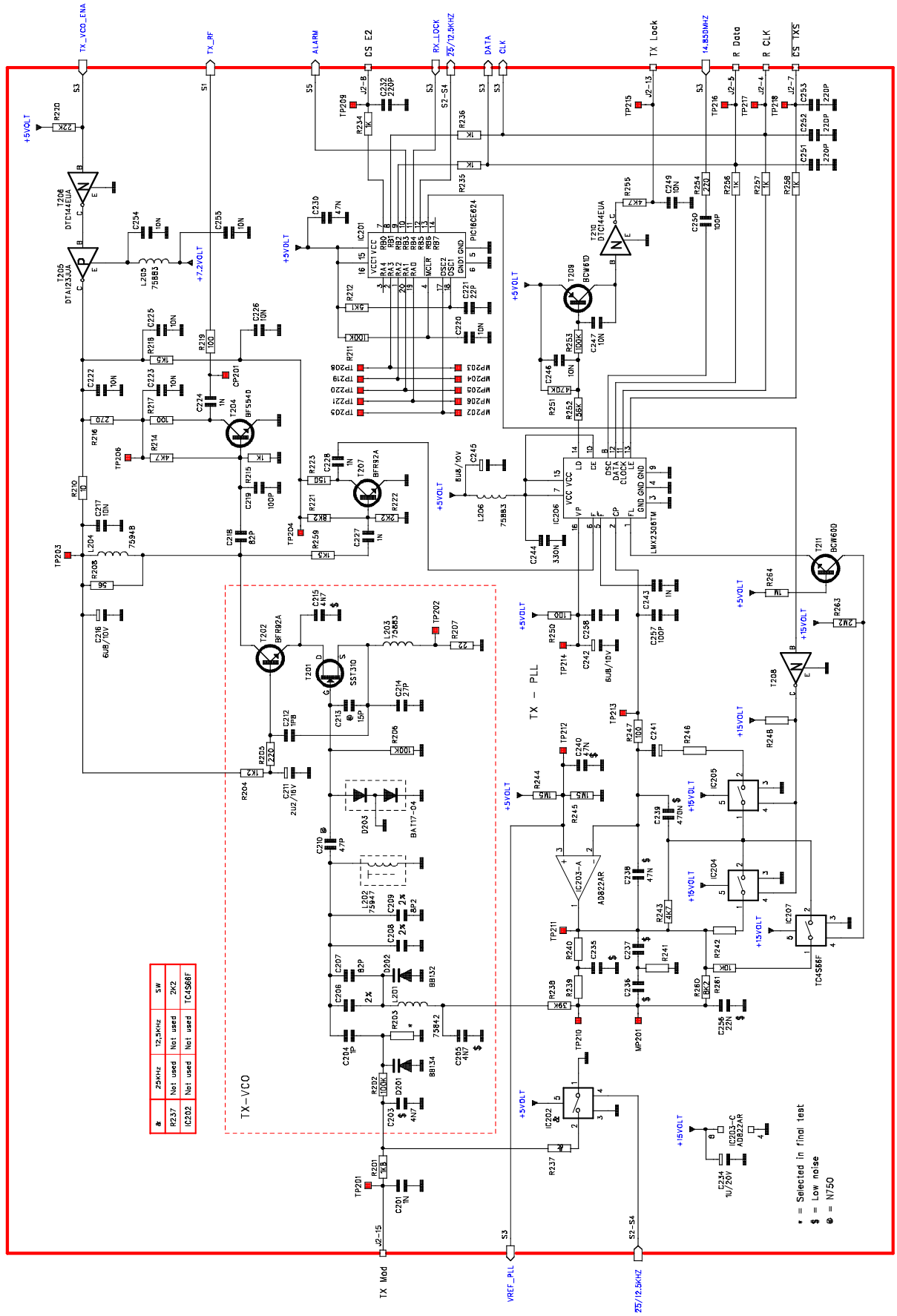

	SIMPLEX	DUPLEX	SIMPLEX BASE
25KHz	Unit No.: 3004	Unit No.: 3204	Unit No.: 3304
12,5KHz	Unit No.: 3005	Unit No.: 3205	Unit No.: 3305
SW	Unit No.: 3014	Unit No.: 3214	Unit No.: 3314

SUBJECT TO CHANGE WITHOUT NOTICE

Date: 04-08-2003 Sign: HEK	10	NIROS COMMUNICATIONS A/S Hirsemarken 5, 3520 Farum	Radioboard TRX3001B/TRDX3001B
Date: 20-08-2004 Sign: PH	11		
Drawing No.: 0-3000-03-11 p 2 of 5		PC. Board No.: 776-8	

Copyright © 2004

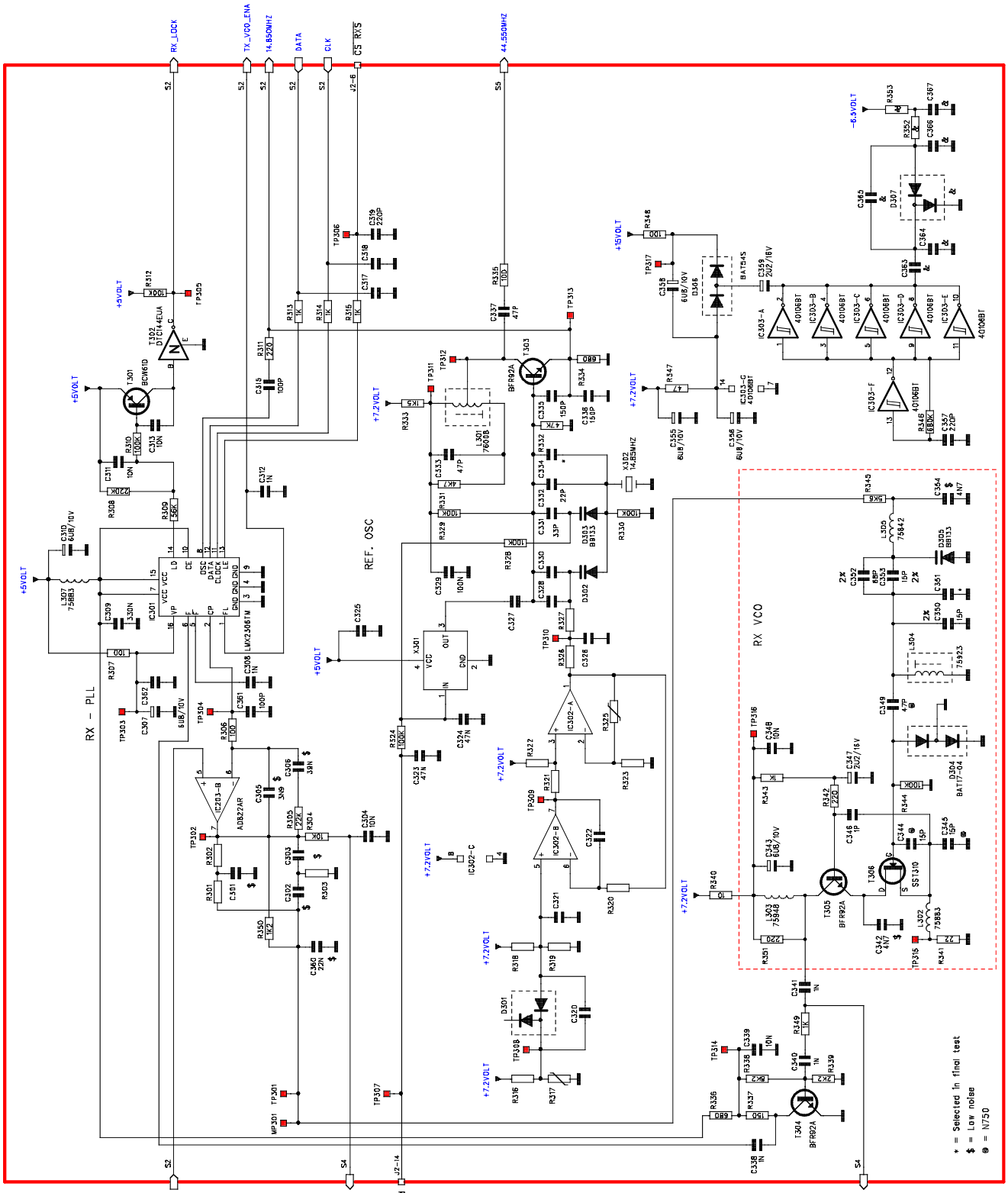

R	Simplex	Duplex	Simplex Base
R352	10K	Not used	10K
R353	47K	Not used	47K
C363	330n	Not used	330n
C364	22p	Not used	22p
C365	22p	Not used	22p
C366	330n	Not used	330n
C367	330n	Not used	330n
D307	BAT54S	Not used	BAT54S

SUBJECT TO CHANGE WITHOUT NOTICE

	SIMPLEX	DUPLEX	SIMPLEX BASE
25KHz	Unit No.: 3004	Unit No.: 3204	Unit No.: 3304
12,5KHz	Unit No.: 3005	Unit No.: 3205	Unit No.: 3305
SW	Unit No.: 3014	Unit No.: 3214	Unit No.: 3314

Date: 04-08-2003 Sign: HEK	10	NIROS COMMUNICATIONS A/S Hirsemarken 5, 3520 Farum	Radioboard TRX3001B/TRDX3001B
Date: 20-08-2004 Sign: PH	11		
Drawing No.: 0-3000-03-11 p 3 of 5		PC. Board No.: 776-B	

Copyright © 2004

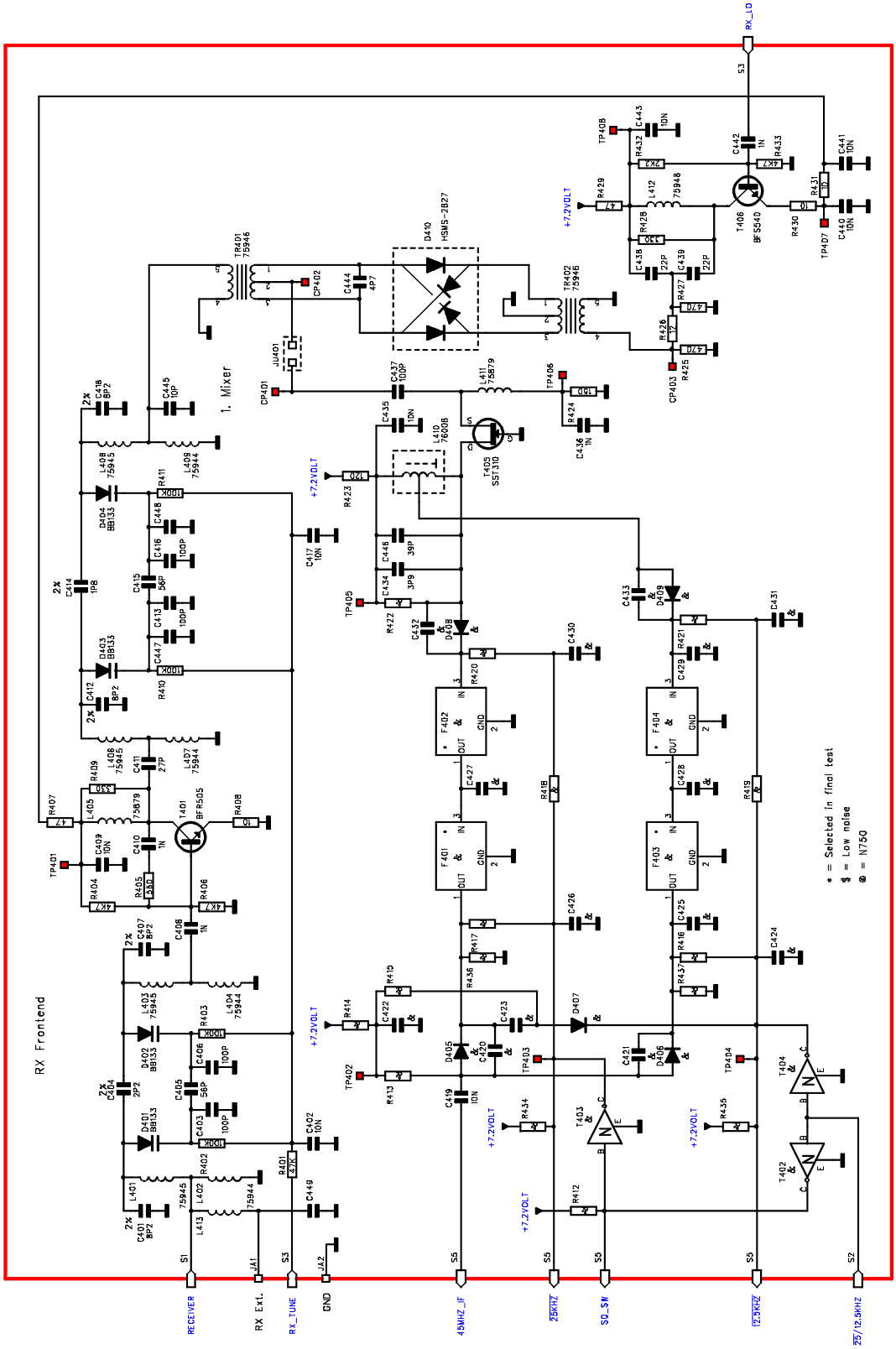

#	25KHz	12,5KHz	SW
R412	Not used	Not used	6K8
R413	Not used	Not used	2K2
R414	Not used	Not used	470
R415	Not used	Not used	4K7
R416	Not used	Not used	390
R417	Not used	Not used	1K8
R418	Not used	Not used	330
R419	Not used	Not used	1K5
R420	Not used	Not used	1K8
R421	Not used	Not used	680
R422	1K	1K5	10K
R434	Not used	Not used	100K
R435	Not used	Not used	100K
R436	820	Not used	Not used
R437	Not used	330	Not used
C420	10n	Not used	Not used
C421	Not used	10n	Not used
C422	Not used	Not used	10n
C423	Not used	Not used	10n
C424	Not used	Not used	10n
C425	Not used	6p8	6p8
C426	Not used	Not used	10n
C427	8p2	Not used	8p2
C428	Not used	18p	18p
C429	Not used	6p8	6p8
C430	Not used	Not used	10n
C431	Not used	Not used	10n
C432	10n	Not used	Not used
C433	Not used	10n	Not used
F401-402	25KHz	Not used	25KHz
F403-404	Not used	12,5KHz	12,5KHz
T402	Not used	Not used	DTC144EUA
T403	Not used	Not used	DTC144EUA
T404	Not used	Not used	DTC114YUA
D405	Not used	Not used	BA682
D406	Not used	Not used	BA682
D407	Not used	Not used	BA682
D408	Not used	Not used	BA682
D409	Not used	Not used	BA682

SUBJECT TO CHANGE WITHOUT NOTICE

	SIMPLEX	DUPLEX	SIMPLEX BASE
25KHz	Unit No.: 3004	Unit No.: 3204	Unit No.: 3304
12,5KHz	Unit No.: 3005	Unit No.: 3205	Unit No.: 3305
SW	Unit No.: 3014	Unit No.: 3214	Unit No.: 3314

Date: 04-08-2003 Sign: HEK	10	NIROS COMMUNICATIONS A/S Hirsemarken 5, 3520 Farum	Radioboard TRX3001B/TRDX3001B
Date: 20-08-2004 Sign: PH	11		
Drawing No.: 0-3000-03-11 p 4 of 5		PC. Board No.: 776-8	

Copyright © 2004

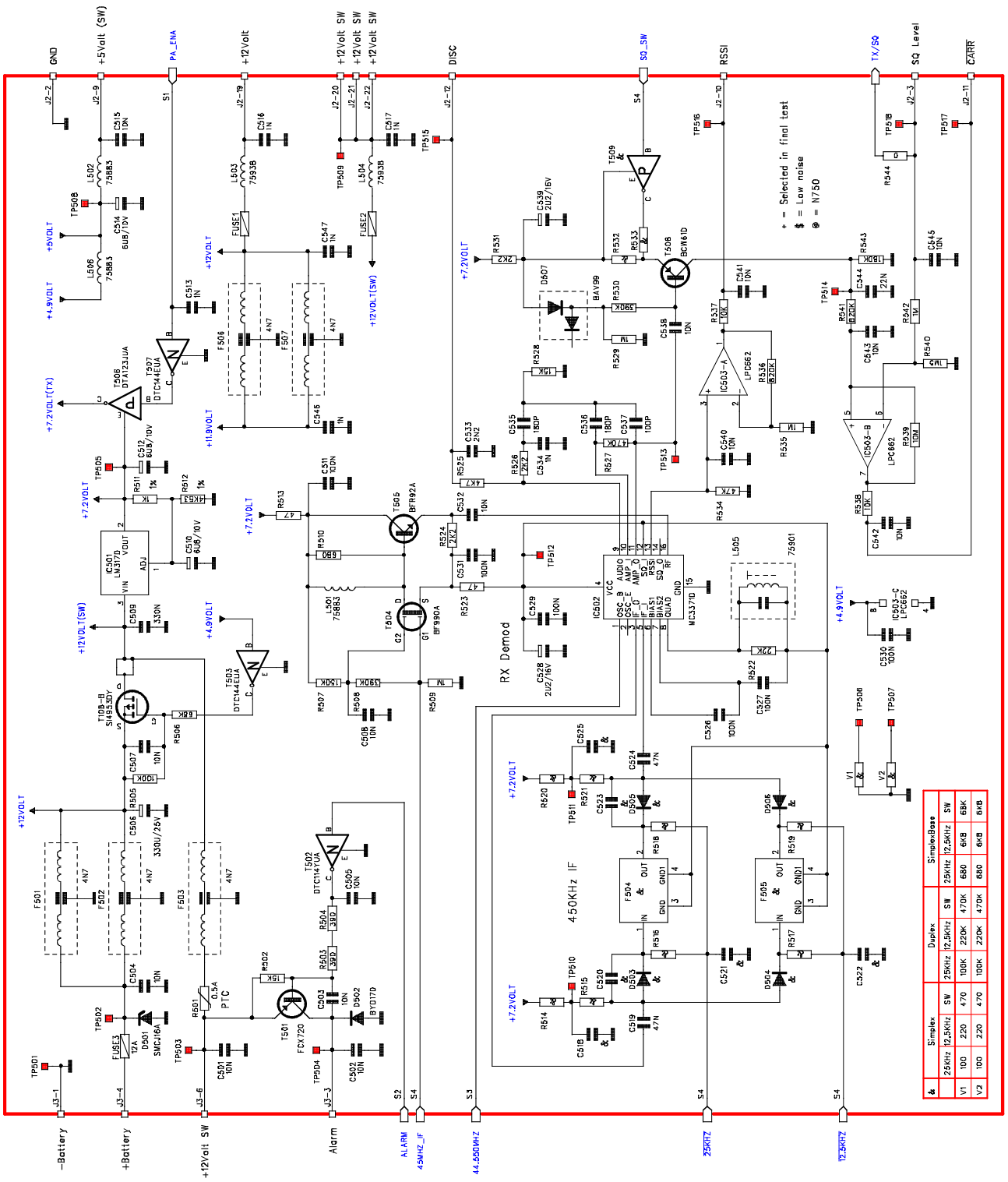

&	25KHz	12,5KHz	SW
V1	100	220	470
V2	100	220	470

&	Duplex 25KHz	Duplex 12,5KHz	Duplex SW	SimplexBase 25KHz	SimplexBase 12,5KHz	SimplexBase SW
V1	100K	220K	470K	680	6K8	6K8
V2	100K	220K	470K	680	6K8	6K8

&	25KHz	12,5KHz	SW
R514	Not used	Not used	470
R515	Not used	Not used	6K8
R516	Not used	Not used	6K8
R517	Not used	Not used	6K8
R518	Not used	Not used	6K8
R519	Not used	Not used	6K8
R520	Not used	Not used	470
R521	Not used	Not used	6K8
R532	6K8	3K3	6K8
R533	Not used	Not used	6K8
C518	Not used	Not used	47n
C520	47n	47n	Not used
C521	Not used	Not used	47n
C522	Not used	Not used	47n
C523	47n	47n	Not used
C525	Not used	Not used	47n
F504	CFWC450E	CFWC450G	CFWC450I
F505	Not used	Not used	CFWC450G
T509	Not used	Not used	DTA144EUA
D503	Not used	Not used	BA682
D504	Not used	Not used	BA682
D505	Not used	Not used	BA682
D506	Not used	Not used	BA682

SUBJECT TO CHANGE WITHOUT NOTICE

	SIMPLEX	DUPLEX	SIMPLEX BASE
25KHz	Unit No.: 3004	Unit No.: 3204	Unit No.: 3304
12,5KHz	Unit No.: 3005	Unit No.: 3205	Unit No.: 3305
SW	Unit No.: 3014	Unit No.: 3214	Unit No.: 3314

Date: 04-08-2003 Sign: HEK	10	NIROS COMMUNICATIONS A/S Hirsemarken 5, 3520 Farum	Radioboard TRX3001B/TRDX3001B
Date: 20-08-2004 Sign: PH	11		
Drawing No.: 0-3000-03-11 p 5 of 5		PC. Board No.: 776-8	

Copyright © 2004

10.2 Componentside

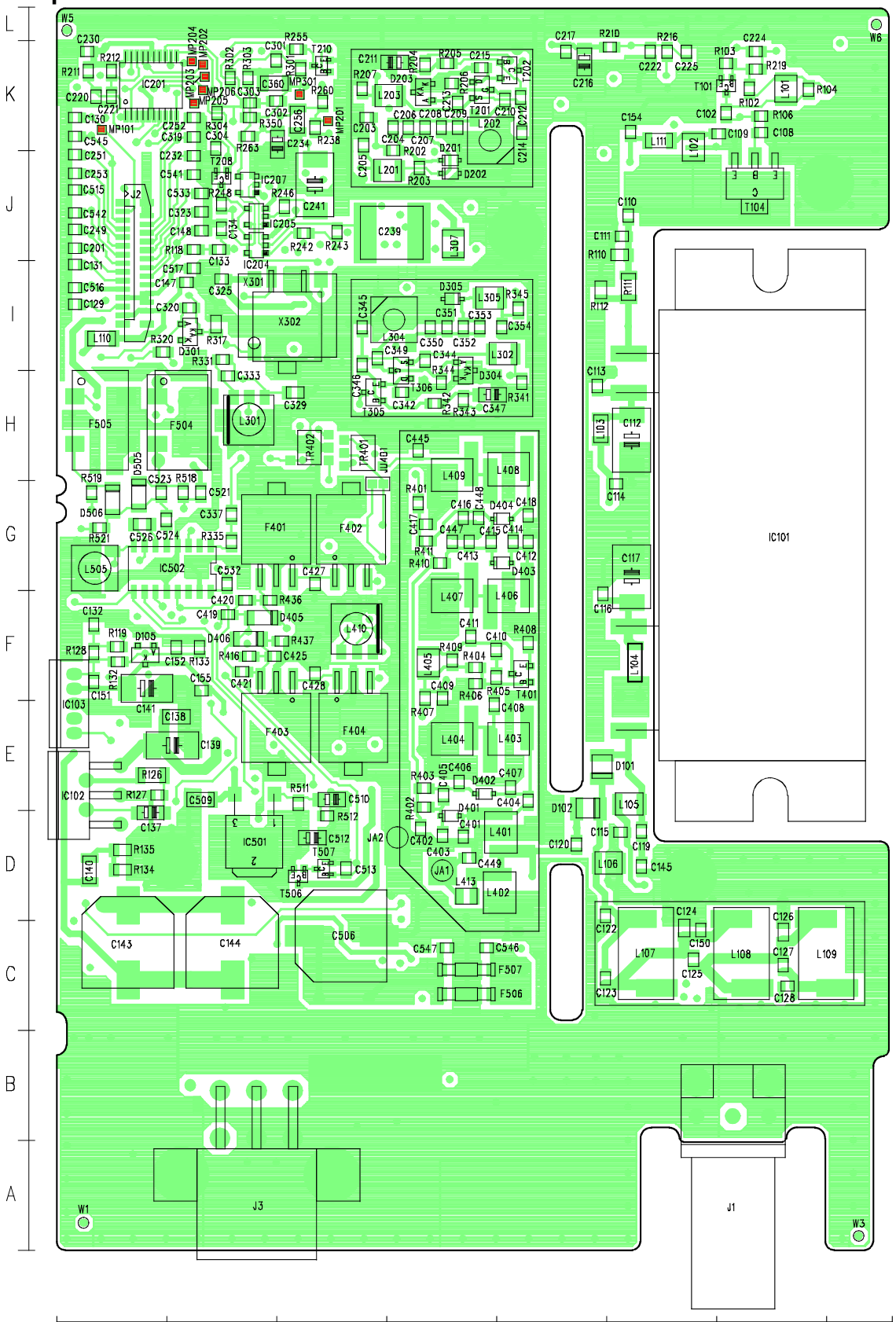

Componentside 776-8

SUBJECT TO CHANGE WITHOUT NOTICE

	SIMPLEX	DUPLEX	SIMPLEX BASE
25KHz	Unit No.: 3004	Unit No.: 3204	Unit No.: 3304
12,5KHz	Unit No.: 3005	Unit No.: 3205	Unit No.: 3305
SW	Unit No.: 3014	Unit No.: 3214	Unit No.: 3314

Date: 04-08-2003 Sign: HEK	10	NIROS COMMUNICATIONS A/S Hirsemarken 5, 3520 Farum		Radioboard TRX3001B/TRDX3001B
Date: 20-08-2004 Sign: PH	11			
Drawing No.: 0-3000-05-11		PC. Board No.: 776-8		

Copyright © 2004

10.3 Wiringside

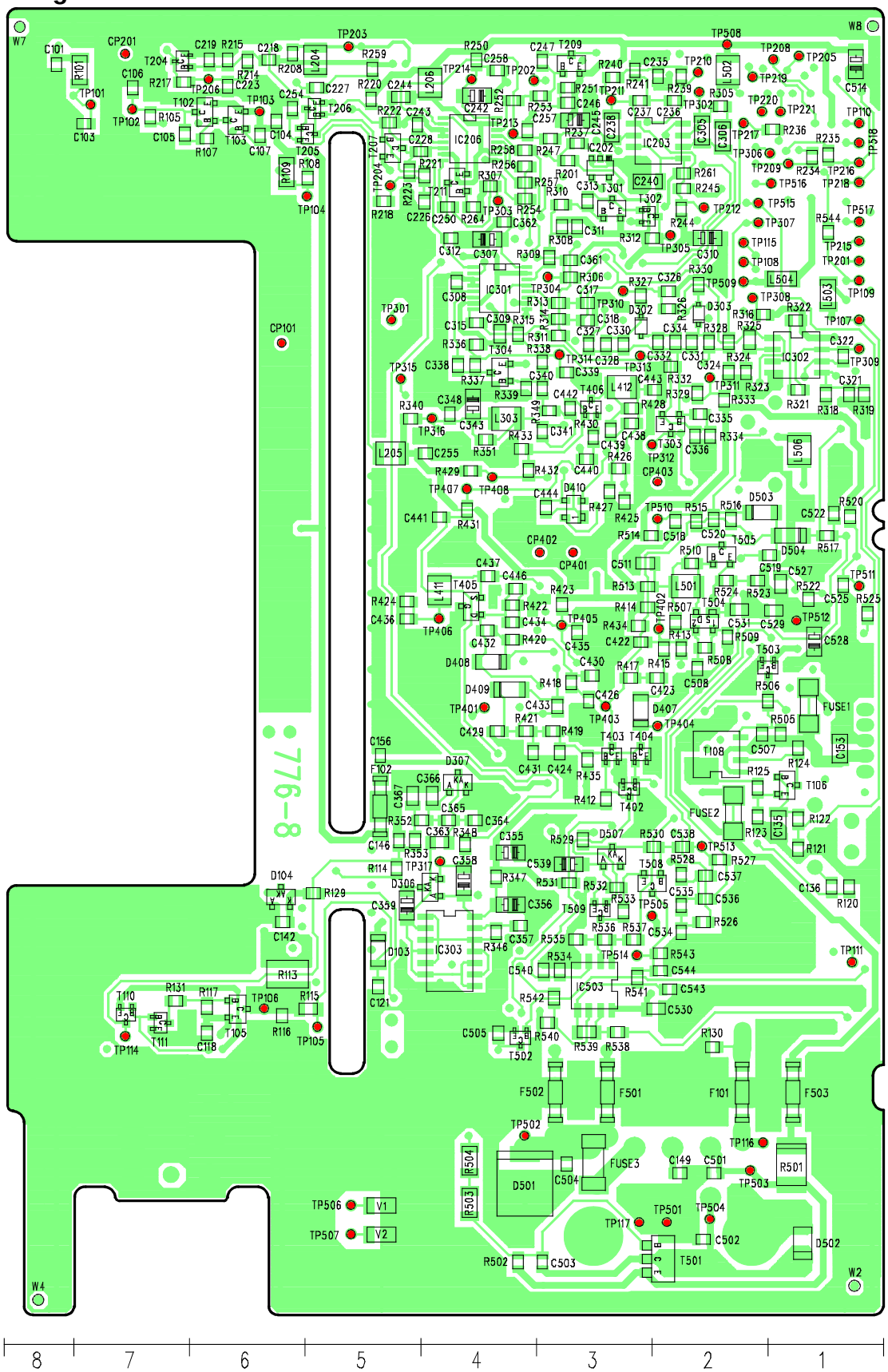

Wiringside 776-8

SUBJECT TO CHANGE WITHOUT NOTICE

	SIMPLEX	DUPLEX	SIMPLEX BASE
25KHz	Unit No.: 3004	Unit No.: 3204	Unit No.: 3304
12,5KHz	Unit No.: 3005	Unit No.: 3205	Unit No.: 3305
SW	Unit No.: 3014	Unit No.: 3214	Unit No.: 3314

Date: 04-08-2003 Sign: HEK	10	NIROS COMMUNICATIONS A/S Hirsemarken 5, 3520 Farum	Radioboard TRX3001B/TRDX3001B	
Date: 20-08-2004 Sign: PH	11			
Drawing No.: 0-3000-04-11		PC. Board No.: 776-8		

Copyright © 2004

10.4 Fieldlist

Name Radioboard TRX3001B/TRDX3001B — Date 23-08-2004
Drawing No. 0-3000-03-11 — Unit No. 3004

Component	Type	Side	Cord	Component	Type	Side	Cord
R101	SMT	BOTTOM	K7	R221	SMT	BOTTOM	J4
R102	SMT	TOP	K7	R222	SMT	BOTTOM	K5
R103	SMT	TOP	K7	R223	SMT	BOTTOM	J5
R104	SMT	TOP	K7	R234	SMT	BOTTOM	K1
R105	SMT	BOTTOM	K7	R235	SMT	BOTTOM	K1
R106	SMT	TOP	K7	R236	SMT	BOTTOM	K1
R107	SMT	BOTTOM	K6	R237	SMT	BOTTOM	K3
R108	SMT	BOTTOM	J5	R238	SMT	TOP	K3
R109	SMT	BOTTOM	J6	R239	SMT	BOTTOM	K2
R110	SMT	TOP	J6	R240	SMT	BOTTOM	K3
R111	SMT	TOP	I6	R241	SMT	BOTTOM	K3
R112	SMT	TOP	I5	R242	SMT	TOP	J3
R113	SMT	BOTTOM	C6	R243	SMT	TOP	J3
R114	SMT	BOTTOM	D5	R244	SMT	BOTTOM	J2
R115	SMT	BOTTOM	C5	R245	SMT	BOTTOM	J2
R116	SMT	BOTTOM	C6	R246	SMT	TOP	J3
R117	SMT	BOTTOM	C6	R247	SMT	BOTTOM	K3
R118	SMT	TOP	J2	R248	SMT	TOP	J2
R119	SMT	TOP	F1	R250	SMT	BOTTOM	K4
R120	SMT	BOTTOM	D1	R251	SMT	BOTTOM	K3
R121	SMT	BOTTOM	E1	R252	SMT	BOTTOM	K4
R122	SMT	BOTTOM	E1	R253	SMT	BOTTOM	K3
R123	SMT	BOTTOM	E2	R254	SMT	BOTTOM	J4
R124	SMT	BOTTOM	E1	R255	SMT	TOP	K3
R125	SMT	BOTTOM	E2	R256	SMT	BOTTOM	J4
R126	SMT	TOP	E1	R257	SMT	BOTTOM	J4
R127	SMT	TOP	E1	R258	SMT	BOTTOM	K4
R128	SMT	TOP	F1	R259	SMT	BOTTOM	K5
R129	SMT	BOTTOM	D5	R260	SMT	TOP	K3
R130	SMT	BOTTOM	C2	R261	SMT	BOTTOM	J2
R131	SMT	BOTTOM	C7	R263	SMT	TOP	K2
R132	SMT	TOP	F1	R264	SMT	BOTTOM	J4
R133	SMT	TOP	F2	R301	SMT	TOP	K3
R134	SMT	TOP	D1	R302	SMT	TOP	K2
R135	SMT	TOP	D1	R303	SMT	TOP	K2
R201	SMT	BOTTOM	J3	R304	SMT	TOP	K2
R202	SMT	TOP	K4	R305	SMT	BOTTOM	K2
R203	SMT	TOP	J4	R306	SMT	BOTTOM	I3
R204	SMT	TOP	K4	R307	SMT	BOTTOM	J4
R205	SMT	TOP	K4	R308	SMT	BOTTOM	J3
R206	SMT	TOP	K4	R309	SMT	BOTTOM	J3
R207	SMT	TOP	K3	R310	SMT	BOTTOM	J3
R208	SMT	BOTTOM	K6	R311	SMT	BOTTOM	I3
R210	SMT	TOP	K6	R312	SMT	BOTTOM	J3
R211	SMT	TOP	K1	R313	SMT	BOTTOM	I3
R212	SMT	TOP	K1	R314	SMT	BOTTOM	I3
R214	SMT	BOTTOM	K6	R315	SMT	BOTTOM	I4
R215	SMT	BOTTOM	K6	R316	SMT	BOTTOM	I2
R216	SMT	TOP	K6	R317	SMT	TOP	I2
R217	SMT	BOTTOM	K7	R318	SMT	BOTTOM	H1
R218	SMT	BOTTOM	J5	R319	SMT	BOTTOM	H1
R219	SMT	TOP	K7	R320	SMT	TOP	I1
R220	SMT	BOTTOM	K5	R321	SMT	BOTTOM	I1

p. 1 of 8 — PC. Board No. 776-8

Copyright © 2004

Name Radioboard TRX3001B/TRDX3001B Date 23-08-2004
Drawing No. 0-3000-03-11 Unit No. 3004

Component	Type	Side	Cord	Component	Type	Side	Cord
R322	SMT	BOTTOM	I1	R422	SMT	BOTTOM	G4
R323	SMT	BOTTOM	I2	R423	SMT	BOTTOM	G3
R324	SMT	BOTTOM	I2	R424	SMT	BOTTOM	G5
R325	SMT	BOTTOM	I2	R425	SMT	BOTTOM	H3
R326	SMT	BOTTOM	I2	R426	SMT	BOTTOM	H3
R327	SMT	BOTTOM	I3	R427	SMT	BOTTOM	H3
R328	SMT	BOTTOM	I2	R428	SMT	BOTTOM	H3
R329	SMT	BOTTOM	H2	R429	SMT	BOTTOM	H4
R330	SMT	BOTTOM	I2	R430	SMT	BOTTOM	H3
R331	SMT	TOP	I2	R431	SMT	BOTTOM	G4
R332	SMT	BOTTOM	I2	R432	SMT	BOTTOM	H4
R333	SMT	BOTTOM	H2	R433	SMT	BOTTOM	H4
R334	SMT	BOTTOM	H2	R434	SMT	BOTTOM	F3
R335	SMT	TOP	G2	R435	SMT	BOTTOM	E3
R336	SMT	BOTTOM	I4	R436	SMT	TOP	F2
R337	SMT	BOTTOM	I4	R437	SMT	TOP	F3
R338	SMT	BOTTOM	I3	R501	SMT	BOTTOM	B1
R339	SMT	BOTTOM	I4	R502	SMT	BOTTOM	A4
R340	SMT	BOTTOM	H5	R503	SMT	BOTTOM	A4
R341	SMT	TOP	H5	R504	SMT	BOTTOM	B4
R342	SMT	TOP	H4	R505	SMT	BOTTOM	F1
R343	SMT	TOP	H4	R506	SMT	BOTTOM	F2
R344	SMT	TOP	H4	R507	SMT	BOTTOM	F2
R345	SMT	TOP	I5	R508	SMT	BOTTOM	F2
R346	SMT	BOTTOM	D4	R509	SMT	BOTTOM	F2
R347	SMT	BOTTOM	D4	R510	SMT	BOTTOM	G2
R348	SMT	BOTTOM	E4	R511	SMT	TOP	E3
R349	SMT	BOTTOM	H3	R512	SMT	TOP	D3
R350	SMT	TOP	K2	R513	SMT	BOTTOM	G3
R351	SMT	BOTTOM	H4	R514	SMT	BOTTOM	G3
R352	SMT	BOTTOM	E4	R515	SMT	BOTTOM	G2
R353	SMT	BOTTOM	E5	R516	SMT	BOTTOM	G2
R401	SMT	TOP	G4	R517	SMT	BOTTOM	G1
R402	SMT	TOP	E4	R518	SMT	TOP	G2
R403	SMT	TOP	E4	R519	SMT	TOP	G1
R404	SMT	TOP	F4	R520	SMT	BOTTOM	G1
R405	SMT	TOP	F5	R521	SMT	TOP	G1
R406	SMT	TOP	F4	R522	SMT	BOTTOM	G1
R407	SMT	TOP	F4	R523	SMT	BOTTOM	G2
R408	SMT	TOP	F5	R524	SMT	BOTTOM	G2
R409	SMT	TOP	F4	R525	SMT	BOTTOM	G1
R410	SMT	TOP	G4	R526	SMT	BOTTOM	D2
R411	SMT	TOP	G4	R527	SMT	BOTTOM	D2
R412	SMT	BOTTOM	E3	R528	SMT	BOTTOM	D2
R413	SMT	BOTTOM	F2	R529	SMT	BOTTOM	E3
R414	SMT	BOTTOM	G3	R530	SMT	BOTTOM	E2
R415	SMT	BOTTOM	F2	R531	SMT	BOTTOM	D3
R416	SMT	TOP	F2	R532	SMT	BOTTOM	D3
R417	SMT	BOTTOM	F3	R533	SMT	BOTTOM	D3
R418	SMT	BOTTOM	F3	R534	SMT	BOTTOM	C3
R419	SMT	BOTTOM	F3	R535	SMT	BOTTOM	D3
R420	SMT	BOTTOM	F4	R536	SMT	BOTTOM	D3
R421	SMT	BOTTOM	F4	R537	SMT	BOTTOM	D3

 PC. Board No. 776-8

Copyright © 2004

Name Radioboard TRX3001B/TRDX3001B Date 23-08-2004
Drawing No. 0-3000-03-11 Unit No. 3004

Component	Type	Side	Cord	Component	Type	Side	Cord
R538	SMT	BOTTOM	C3	C147	SMT	TOP	I2
R539	SMT	BOTTOM	C3	C148	SMT	TOP	J2
R540	SMT	BOTTOM	C3	C149	SMT	BOTTOM	B2
R541	SMT	BOTTOM	C3	C150	SMT	TOP	C6
R542	SMT	BOTTOM	C3	C151	SMT	TOP	F1
R543	SMT	BOTTOM	D2	C152	SMT	TOP	F2
R544	SMT	BOTTOM	J1	C153	SMT	BOTTOM	E1
C101	SMT	BOTTOM	K8	C154	SMT	TOP	K6
C102	SMT	TOP	K7	C155	SMT	TOP	F2
C103	SMT	BOTTOM	K7	C156	SMT	BOTTOM	E5
C104	SMT	BOTTOM	K6	C201	SMT	TOP	J1
C105	SMT	BOTTOM	K7	C203	SMT	TOP	K3
C106	SMT	BOTTOM	K7	C204	SMT	TOP	K4
C107	SMT	BOTTOM	K6	C205	SMT	TOP	K3
C108	SMT	TOP	K7	C206	SMT	TOP	K4
C109	SMT	TOP	K7	C207	SMT	TOP	K4
C110	SMT	TOP	J6	C208	SMT	TOP	K4
C111	SMT	TOP	J6	C209	SMT	TOP	K4
C112	SMT	TOP	H6	C210	SMT	TOP	K5
C113	SMT	TOP	H5	C211	SMT	TOP	K4
C114	SMT	TOP	G6	C212	SMT	TOP	K5
C115	SMT	TOP	D6	C213	SMT	TOP	K4
C116	SMT	TOP	F5	C214	SMT	TOP	K5
C117	SMT	TOP	G6	C215	SMT	TOP	K4
C118	SMT	BOTTOM	C6	C216	SMT	TOP	K5
C119	SMT	TOP	D6	C217	SMT	TOP	K5
C120	SMT	TOP	D5	C218	SMT	BOTTOM	K6
C121	SMT	BOTTOM	C5	C219	SMT	BOTTOM	K6
C122	SMT	TOP	D5	C220	SMT	TOP	K1
C123	SMT	TOP	C5	C221	SMT	TOP	K1
C124	SMT	TOP	C6	C222	SMT	TOP	K6
C125	SMT	TOP	C6	C223	SMT	BOTTOM	K6
C126	SMT	TOP	C7	C224	SMT	TOP	K7
C127	SMT	TOP	C7	C225	SMT	TOP	K6
C128	SMT	TOP	C7	C226	SMT	BOTTOM	J4
C129	SMT	TOP	I1	C227	SMT	BOTTOM	K5
C130	SMT	TOP	K1	C228	SMT	BOTTOM	K5
C131	SMT	TOP	I1	C230	SMT	TOP	K1
C132	SMT	TOP	F1	C232	SMT	TOP	J2
C133	SMT	TOP	J2	C234	SMT	TOP	K3
C134	SMT	TOP	J2	C235	SMT	BOTTOM	K2
C135	SMT	BOTTOM	E1	C236	SMT	BOTTOM	K2
C136	SMT	BOTTOM	D1	C237	SMT	BOTTOM	K3
C137	SMT	TOP	D1	C238	SMT	BOTTOM	K3
C138	SMT	TOP	E2	C239	SMT	TOP	J4
C139	SMT	TOP	E2	C240	SMT	BOTTOM	J3
C140	SMT	TOP	D1	C241	SMT	TOP	J3
C141	SMT	TOP	F1	C242	SMT	BOTTOM	K4
C142	SMT	BOTTOM	D6	C243	SMT	BOTTOM	K5
C143	SMT	TOP	C1	C244	SMT	BOTTOM	K5
C144	SMT	TOP	C2	C245	SMT	BOTTOM	K3
C145	SMT	TOP	D6	C246	SMT	BOTTOM	K3
C146	SMT	BOTTOM	E5	C247	SMT	BOTTOM	K3

p. 3 of 8 PC. Board No. 776-8

Copyright © 2004

Name Radioboard TRX3001B/TRDX3001B Date 23-08-2004
Drawing No. 0-3000-03-11 Unit No. 3004

Component	Type	Side	Cord	Component	Type	Side	Cord
C249	SMT	TOP	J1	C346	SMT	TOP	I3
C250	SMT	BOTTOM	J4	C347	SMT	TOP	H4
C251	SMT	TOP	J1	C348	SMT	BOTTOM	H4
C252	SMT	TOP	K2	C349	SMT	TOP	I3
C253	SMT	TOP	J1	C350	SMT	TOP	I4
C254	SMT	BOTTOM	K6	C351	SMT	TOP	I4
C255	SMT	BOTTOM	H4	C352	SMT	TOP	I4
C256	SMT	TOP	K3	C353	SMT	TOP	I4
C257	SMT	BOTTOM	K4	C354	SMT	TOP	I5
C258	SMT	BOTTOM	K4	C355	SMT	BOTTOM	E4
C301	SMT	TOP	K3	C356	SMT	BOTTOM	D4
C302	SMT	TOP	K3	C357	SMT	BOTTOM	D4
C303	SMT	TOP	K2	C358	SMT	BOTTOM	D4
C304	SMT	TOP	K2	C359	SMT	BOTTOM	D5
C305	SMT	BOTTOM	K2	C360	SMT	TOP	K2
C306	SMT	BOTTOM	K2	C361	SMT	BOTTOM	J3
C307	SMT	BOTTOM	J4	C362	SMT	BOTTOM	J4
C308	SMT	BOTTOM	I4	C363	SMT	BOTTOM	E4
C309	SMT	BOTTOM	I4	C364	SMT	BOTTOM	E4
C310	SMT	BOTTOM	J2	C365	SMT	BOTTOM	E4
C311	SMT	BOTTOM	J3	C366	SMT	BOTTOM	E4
C312	SMT	BOTTOM	J4	C367	SMT	BOTTOM	E5
C313	SMT	BOTTOM	J3	C401	SMT	TOP	D4
C315	SMT	BOTTOM	I4	C402	SMT	TOP	D4
C317	SMT	BOTTOM	I3	C403	SMT	TOP	D4
C318	SMT	BOTTOM	I3	C404	SMT	TOP	E5
C319	SMT	TOP	K2	C405	SMT	TOP	E4
C320	SMT	TOP	I2	C406	SMT	TOP	E4
C321	SMT	BOTTOM	H1	C407	SMT	TOP	E5
C322	SMT	BOTTOM	I1	C408	SMT	TOP	E4
C323	SMT	TOP	J2	C409	SMT	TOP	F4
C324	SMT	BOTTOM	I2	C410	SMT	TOP	F5
C325	SMT	TOP	I2	C411	SMT	TOP	F4
C326	SMT	BOTTOM	I2	C412	SMT	TOP	G5
C327	SMT	BOTTOM	I3	C413	SMT	TOP	G4
C328	SMT	BOTTOM	I3	C414	SMT	TOP	G5
C329	SMT	TOP	H3	C415	SMT	TOP	G4
C330	SMT	BOTTOM	I3	C416	SMT	TOP	G4
C331	SMT	BOTTOM	I2	C417	SMT	TOP	G4
C332	SMT	BOTTOM	I2	C418	SMT	TOP	G5
C333	SMT	TOP	H2	C419	SMT	TOP	F2
C334	SMT	BOTTOM	I2	C420	SMT	TOP	F2
C335	SMT	BOTTOM	H2	C421	SMT	TOP	F2
C336	SMT	BOTTOM	H2	C422	SMT	BOTTOM	F3
C337	SMT	TOP	G2	C423	SMT	BOTTOM	F2
C338	SMT	BOTTOM	I4	C424	SMT	BOTTOM	E3
C339	SMT	BOTTOM	I3	C425	SMT	TOP	F2
C340	SMT	BOTTOM	I3	C426	SMT	BOTTOM	F3
C341	SMT	BOTTOM	H3	C427	SMT	TOP	G3
C342	SMT	TOP	H4	C428	SMT	TOP	F3
C343	SMT	BOTTOM	H4	C429	SMT	BOTTOM	F4
C344	SMT	TOP	I4	C430	SMT	BOTTOM	F3
C345	SMT	TOP	I3	C431	SMT	BOTTOM	E4

p. 4 of 8 PC. Board No. 776-8

Copyright © 2004

Name Radioboard TRX3001B/TRDX3001B Date 23-08-2004
Drawing No. 0-3000-03-11 Unit No. 3004

Component	Type	Side	Cord	Component	Type	Side	Cord
C432	SMT	BOTTOM	F4	C536	SMT	BOTTOM	D2
C433	SMT	BOTTOM	F3	C537	SMT	BOTTOM	D2
C434	SMT	BOTTOM	F4	C538	SMT	BOTTOM	E2
C435	SMT	BOTTOM	F3	C539	SMT	BOTTOM	D3
C436	SMT	BOTTOM	G5	C540	SMT	BOTTOM	C3
C437	SMT	BOTTOM	G4	C541	SMT	TOP	J2
C438	SMT	BOTTOM	H3	C542	SMT	TOP	J1
C439	SMT	BOTTOM	H3	C543	SMT	BOTTOM	C2
C440	SMT	BOTTOM	H3	C544	SMT	BOTTOM	C2
C441	SMT	BOTTOM	G4	C545	SMT	TOP	K1
C442	SMT	BOTTOM	H3	C546	SMT	TOP	C4
C443	SMT	BOTTOM	I2	C547	SMT	TOP	C4
C444	SMT	BOTTOM	G3	F101	SMT	BOTTOM	B2
C445	SMT	TOP	H4	F102	SMT	BOTTOM	E5
C446	SMT	BOTTOM	G4	F401	SMT	TOP	G3
C447	SMT	TOP	G4	F402	SMT	TOP	G3
C448	SMT	TOP	G4	F403	SMT	TOP	E3
C449	SMT	TOP	D4	F404	SMT	TOP	E3
C501	SMT	BOTTOM	B2	F501	SMT	BOTTOM	B3
C502	SMT	BOTTOM	A2	F502	SMT	BOTTOM	B3
C503	SMT	BOTTOM	A3	F503	SMT	BOTTOM	B1
C504	SMT	BOTTOM	B3	F504	SMT	TOP	H2
C505	SMT	BOTTOM	C4	F505	SMT	TOP	H1
C506	SMT	TOP	C3	F506	SMT	TOP	C4
C507	SMT	BOTTOM	F2	F507	SMT	TOP	C4
C508	SMT	BOTTOM	F2	X301	SMT	TOP	I3
C509	SMT	TOP	E2	X302	SMT	TOP	I3
C510	SMT	TOP	E3	T101	SMT	TOP	K7
C511	SMT	BOTTOM	G3	T102	SMT	BOTTOM	K6
C512	SMT	TOP	D3	T103	SMT	BOTTOM	K6
C513	SMT	TOP	D3	T104	SMT	TOP	J7
C514	SMT	BOTTOM	K1	T105	SMT	BOTTOM	C6
C515	SMT	TOP	J1	T106	SMT	BOTTOM	E1
C516	SMT	TOP	I1	T108	SMT	BOTTOM	E2
C517	SMT	TOP	I2	T110	SMT	BOTTOM	C7
C518	SMT	BOTTOM	G2	T111	SMT	BOTTOM	C7
C519	SMT	BOTTOM	G1	T201	SMT	TOP	K4
C520	SMT	BOTTOM	G2	T202	SMT	TOP	K5
C521	SMT	TOP	G2	T204	SMT	BOTTOM	K7
C522	SMT	BOTTOM	G1	T205	SMT	BOTTOM	K5
C523	SMT	TOP	G1	T206	SMT	BOTTOM	K5
C524	SMT	TOP	G2	T207	SMT	BOTTOM	K5
C525	SMT	BOTTOM	G1	T208	SMT	TOP	J2
C526	SMT	TOP	G1	T209	SMT	BOTTOM	K3
C527	SMT	BOTTOM	G1	T210	SMT	TOP	K3
C528	SMT	BOTTOM	F1	T211	SMT	BOTTOM	J4
C529	SMT	BOTTOM	G1	T301	SMT	BOTTOM	J3
C530	SMT	BOTTOM	C2	T302	SMT	BOTTOM	J3
C531	SMT	BOTTOM	G2	T303	SMT	BOTTOM	H2
C532	SMT	TOP	G2	T304	SMT	BOTTOM	I4
C533	SMT	TOP	J2	T305	SMT	TOP	H3
C534	SMT	BOTTOM	D2	T306	SMT	TOP	I4
C535	SMT	BOTTOM	D2	T401	SMT	TOP	F5

p. 5 of 8 PC. Board No. 776-8

Copyright © 2004

Name Radioboard TRX3001B/TRDX3001B Date 23-08-2004
Drawing No. 0-3000-03-11 Unit No. 3004

Component	Type	Side	Cord	Component	Type	Side	Cord
T402	SMT	BOTTOM	E3	IC205	SMT	TOP	J2
T403	SMT	BOTTOM	E3	IC206	SMT	BOTTOM	K4
T404	SMT	BOTTOM	E3	IC207	SMT	TOP	J2
T405	SMT	BOTTOM	G4	IC301	SMT	BOTTOM	I4
T406	SMT	BOTTOM	H3	IC302	SMT	BOTTOM	I1
T501	SMT	BOTTOM	A2	IC303	SMT	BOTTOM	D4
T502	SMT	BOTTOM	C4	IC501	SMT	TOP	D2
T503	SMT	BOTTOM	F2	IC502	SMT	TOP	G2
T504	SMT	BOTTOM	G2	IC503	SMT	BOTTOM	C3
T505	SMT	BOTTOM	G2	TR401	SMT	TOP	H3
T506	SMT	TOP	D3	TR402	SMT	TOP	H3
T507	SMT	TOP	D3	L101	SMT	TOP	K7
T508	SMT	BOTTOM	D3	L102	SMT	TOP	K6
T509	SMT	BOTTOM	D3	L103	SMT	TOP	H5
D101	SMT	TOP	E5	L104	SMT	TOP	F6
D102	SMT	TOP	E5	L105	SMT	TOP	E6
D103	SMT	BOTTOM	D5	L106	SMT	TOP	D6
D104	SMT	BOTTOM	D6	L107	SMT	TOP	C6
D105	SMT	TOP	F1	L108	SMT	TOP	C7
D201	SMT	TOP	J4	L109	SMT	TOP	C8
D202	SMT	TOP	J4	L110	SMT	TOP	I1
D203	SMT	TOP	K4	L111	SMT	TOP	K6
D301	SMT	TOP	I2	L201	SMT	TOP	J4
D302	SMT	BOTTOM	I3	L202	SMT	TOP	K4
D303	SMT	BOTTOM	I2	L203	SMT	TOP	K4
D304	SMT	TOP	I4	L204	SMT	BOTTOM	K5
D305	SMT	TOP	I4	L205	SMT	BOTTOM	H5
D306	SMT	BOTTOM	D4	L206	SMT	BOTTOM	K4
D307	SMT	BOTTOM	E4	L301	SMT	TOP	H2
D401	SMT	TOP	D4	L302	SMT	TOP	I5
D402	SMT	TOP	E4	L303	SMT	BOTTOM	H4
D403	SMT	TOP	G5	L304	SMT	TOP	I4
D404	SMT	TOP	G5	L305	SMT	TOP	I4
D405	SMT	TOP	F2	L307	SMT	TOP	J4
D406	SMT	TOP	F2	L401	SMT	TOP	D5
D407	SMT	BOTTOM	F3	L402	SMT	TOP	D5
D408	SMT	BOTTOM	F4	L403	SMT	TOP	E5
D409	SMT	BOTTOM	F4	L404	SMT	TOP	E4
D410	SMT	BOTTOM	G3	L405	SMT	TOP	F4
D501	SMT	BOTTOM	B4	L406	SMT	TOP	F5
D502	SMT	BOTTOM	A1	L407	SMT	TOP	F4
D503	SMT	BOTTOM	G2	L408	SMT	TOP	H5
D504	SMT	BOTTOM	G1	L409	SMT	TOP	H4
D505	SMT	TOP	G1	L410	SMT	TOP	F3
D506	SMT	TOP	G1	L411	SMT	BOTTOM	G4
D507	SMT	BOTTOM	D3	L412	SMT	BOTTOM	I3
IC101	SMT	TOP	G6	L413	SMT	TOP	D4
IC102	LEAD	TOP	E1	L501	SMT	BOTTOM	G2
IC103	LEAD	TOP	E1	L502	SMT	BOTTOM	K2
IC201	SMT	TOP	K1	L503	SMT	BOTTOM	I1
IC202	SMT	BOTTOM	J3	L504	SMT	BOTTOM	I1
IC203	SMT	BOTTOM	K2	L505	SMT	TOP	G1
IC204	SMT	TOP	J2	L506	SMT	BOTTOM	H1

p. 6 of 8 PC. Board No. 776-8

Copyright © 2004

Name Radioboard TRX3001B/TRDX3001B Date 23-08-2004
Drawing No. 0-3000-03-11 Unit No. 3004

Component	Type	Side	Cord	Component	Type	Side	Cord
FUSE1	SMT	BOTTOM	F1	TP316	SMT	BOTTOM	H4
FUSE2	SMT	BOTTOM	E2	TP317	SMT	BOTTOM	D4
FUSE3	SMT	BOTTOM	B3	TP401	SMT	BOTTOM	F4
TP101	SMT	BOTTOM	K7	TP402	SMT	BOTTOM	F2
TP102	SMT	BOTTOM	K7	TP403	SMT	BOTTOM	F3
TP103	SMT	BOTTOM	K6	TP404	SMT	BOTTOM	F2
TP104	SMT	BOTTOM	J5	TP405	SMT	BOTTOM	F3
TP105	SMT	BOTTOM	C5	TP406	SMT	BOTTOM	G4
TP106	SMT	BOTTOM	C6	TP407	SMT	BOTTOM	H4
TP107	SMT	BOTTOM	I1	TP408	SMT	BOTTOM	H4
TP108	SMT	BOTTOM	J2	TP501	SMT	BOTTOM	A2
TP109	SMT	BOTTOM	I1	TP502	SMT	BOTTOM	B4
TP110	SMT	BOTTOM	K1	TP503	SMT	BOTTOM	B2
TP111	SMT	BOTTOM	D1	TP504	SMT	BOTTOM	A2
TP114	SMT	BOTTOM	C7	TP505	SMT	BOTTOM	D3
TP115	SMT	BOTTOM	J2	TP506	SMT	BOTTOM	A5
TP116	SMT	BOTTOM	B2	TP507	SMT	BOTTOM	A5
TP117	SMT	BOTTOM	A3	TP508	SMT	BOTTOM	K2
TP201	SMT	BOTTOM	J1	TP509	SMT	BOTTOM	I2
TP202	SMT	BOTTOM	K4	TP510	SMT	BOTTOM	G2
TP203	SMT	BOTTOM	K5	TP511	SMT	BOTTOM	G1
TP204	SMT	BOTTOM	J5	TP512	SMT	BOTTOM	G1
TP205	SMT	BOTTOM	K1	TP513	SMT	BOTTOM	E2
TP206	SMT	BOTTOM	K6	TP514	SMT	BOTTOM	D3
TP208	SMT	BOTTOM	K1	TP515	SMT	BOTTOM	J2
TP209	SMT	BOTTOM	J1	TP516	SMT	BOTTOM	J1
TP210	SMT	BOTTOM	K2	TP517	SMT	BOTTOM	J1
TP211	SMT	BOTTOM	K3	TP518	SMT	BOTTOM	K1
TP212	SMT	BOTTOM	J2	CP101	LEAD	BOTTOM	I6
TP213	SMT	BOTTOM	K4	CP201	LEAD	BOTTOM	K7
TP214	SMT	BOTTOM	K4	CP401	LEAD	BOTTOM	G3
TP215	SMT	BOTTOM	J1	CP402	LEAD	BOTTOM	G3
TP216	SMT	BOTTOM	J1	CP403	LEAD	BOTTOM	H2
TP217	SMT	BOTTOM	K2	MP101	SMT	TOP	K1
TP218	SMT	BOTTOM	J1	MP201	SMT	TOP	K3
TP219	SMT	BOTTOM	K2	MP202	SMT	TOP	K2
TP220	SMT	BOTTOM	K2	MP203	SMT	TOP	K2
TP221	SMT	BOTTOM	K1	MP204	SMT	TOP	K2
TP301	SMT	BOTTOM	I5	MP205	SMT	TOP	K2
TP302	SMT	BOTTOM	K2	MP206	SMT	TOP	K2
TP303	SMT	BOTTOM	J4	MP301	SMT	TOP	K3
TP304	SMT	BOTTOM	I3	JU401	SMT	TOP	G3
TP305	SMT	BOTTOM	J2	J1	LEAD	TOP	B7
TP306	SMT	BOTTOM	K1	J2	SMT	TOP	I1
TP307	SMT	BOTTOM	J2	J3	LEAD	TOP	B2
TP308	SMT	BOTTOM	I2	JA1	SMT	TOP	D4
TP309	SMT	BOTTOM	I1	JA2	SMT	TOP	D4
TP310	SMT	BOTTOM	I3	W1	SMT	TOP	A1
TP311	SMT	BOTTOM	I2	W2	SMT	BOTTOM	A1
TP312	SMT	BOTTOM	H3	W3	SMT	TOP	A8
TP313	SMT	BOTTOM	I3	W4	SMT	BOTTOM	A8
TP314	SMT	BOTTOM	I3	W5	SMT	TOP	L1
TP315	SMT	BOTTOM	I5	W6	SMT	TOP	L8

p. 7 of 8 PC. Board No. 776-8

Copyright © 2004

Name Radioboard TRX3001B/TRDX3001B Date 23-08-2004
Drawing No. 0-3000-03-11 Unit No. 3004

Component	Type	Side	Cord	Component	Type	Side	Cord
W7	SMT	BOTTOM	L8				
W8	SMT	BOTTOM	L1				
V1	SMT	BOTTOM	A5				
V2	SMT	BOTTOM	A5				

p. 8 of 8 PC. Board No. 776-8

Copyright © 2004

10.5 Partlist

Partlist for Radioboard TRX3001B/TRDX3001B Date 20-08-2004
Drawing No. 0-3000-03-11 Unit No. 3004

Component	Description		Value	Niros No.
	Simplex	25KHz	S_25	3004
	Simplex	12,5KHz	S_12	3005
	Simplex	12,5/25KHz	S_SW	3014
	Duplex	25KHz	D_25	3204
	Duplex	12,5KHz	D_12	3205
	Duplex	12,5/25KHz	D_SW	3214
	Simplex Base	25KHz	SB_25	3304
	Simplex Base	12,5KHz	SB_12	3305
	Simplex Base	12,5/25KHz	SB_SW	3314
R101	Resistor,chip1206		150 Ohm	12151
R102	Resistor,chip603		820 Ohm	14821
R103	Resistor,chip603		220 Ohm	14221
R104	Resistor,chip603		33 Ohm	14330
R105	Resistor,chip603		1 Kohm	14102
R106	Resistor,chip603		1 Kohm	14102
R107	Resistor,chip603		22 Kohm	14223
R108	Resistor,chip603		150 Ohm	14151
R109	Resistor,chip1206		10 Ohm	12100
R110	Resistor,chip805		220 Ohm	13221
R111	Resistor,chip1206		27 Ohm	12270
R112	Resistor,chip805		220 Ohm	13221
R113	Resistor,chip1218	S_25	270 Ohm	10925
	Resistor,chip1218	S_12	270 Ohm	10925
	Resistor,chip1218	S_SW	270 Ohm	10925
	Resistor,chip1218	D_25	Not used	
	Resistor,chip1218	D_12	Not used	
	Resistor,chip1218	D_SW	Not used	
	Resistor,chip1218	SB_25	270 Ohm	10925
	Resistor,chip1218	SB_12	270 Ohm	10925
	Resistor,chip1218	SB_SW	270 Ohm	10925
R114	Resistor,chip603	S_25	2,7 Kohm	14272
	Resistor,chip603	S_12	2,7 Kohm	14272
	Resistor,chip603	S_SW	2,7 Kohm	14272
	Resistor,chip603	D_25	Not used	
	Resistor,chip603	D_12	Not used	
	Resistor,chip603	D_SW	Not used	
	Resistor,chip603	SB_25	2,7 Kohm	14272
	Resistor,chip603	SB_12	2,7 Kohm	14272
	Resistor,chip603	SB_SW	2,7 Kohm	14272
R115	Resistor,chip805	S_25	2,2 Kohm	13222
	Resistor,chip805	S_12	2,2 Kohm	13222
	Resistor,chip805	S_SW	2,2 Kohm	13222
	Resistor,chip805	D_25	Not used	
	Resistor,chip805	D_12	Not used	
	Resistor,chip805	D_SW	Not used	
	Resistor,chip805	SB_25	2,2 Kohm	13222
	Resistor,chip805	SB_12	2,2 Kohm	13222

p. 1 of 31 PC. Board No. 776-8

Copyright © 2004

Partlist for Radioboard TRX3001B/TRDX3001B Date 20-08-2004
Drawing No. 0-3000-03-11 Unit No. 3004

Component	Description		Value	Niros No.
	Resistor,chip805	SB_SW	2,2 Kohm	13222
R116	Resistor,chip603	S_25	10 Kohm	14103
	Resistor,chip603	S_12	10 Kohm	14103
	Resistor,chip603	S_SW	10 Kohm	14103
	Resistor,chip603	D_25	Not used	
	Resistor,chip603	D_12	Not used	
	Resistor,chip603	D_SW	Not used	
	Resistor,chip603	SB_25	10 Kohm	14103
	Resistor,chip603	SB_12	10 Kohm	14103
	Resistor,chip603	SB_SW	10 Kohm	14103
R117	Resistor,chip603	S_25	10 Kohm	14103
	Resistor,chip603	S_12	10 Kohm	14103
	Resistor,chip603	S_SW	10 Kohm	14103
	Resistor,chip603	D_25	Not used	
	Resistor,chip603	D_12	Not used	
	Resistor,chip603	D_SW	Not used	
	Resistor,chip603	SB_25	10 Kohm	14103
	Resistor,chip603	SB_12	10 Kohm	14103
	Resistor,chip603	SB_SW	10 Kohm	14103
R118	Resistor,chip603		3,3 Kohm	14332
R119	Resistor,chip603		47 Kohm	14473
R120	Resistor,chip603		47 Kohm	14473
R121	Resistor,chip603		100 Kohm	14104
R122	Resistor,chip603		180 Kohm	14184
R123	Resistor,chip603		4,7 Kohm	14472
R124	Resistor,chip603		100 Kohm	14104
R125	Resistor,chip603		18 Kohm	14183
R126	Resistor,chip1206		390 Ohm	12391
R127	Resistor,chip603		12 Ohm	14120
R128	Resistor,chip603		1,8 Mohm	14185
R129	Resistor,chip603		820 Kohm	14824
R130	Resistor,chip603		4,7 Kohm	14472
R131	Resistor,chip603	S_25	10 Kohm	14103
	Resistor,chip603	S_12	10 Kohm	14103
	Resistor,chip603	S_SW	10 Kohm	14103
	Resistor,chip603	D_25	Not used	
	Resistor,chip603	D_12	Not used	
	Resistor,chip603	D_SW	Not used	
	Resistor,chip603	SB_25	10 Kohm	14103
	Resistor,chip603	SB_12	10 Kohm	14103
	Resistor,chip603	SB_SW	10 Kohm	14103
R132	Resistor,chip603		820 Kohm	14824
R133	Resistor,chip603		27 Kohm	14273
R134	Resistor,chip805		2,2 Ohm	13229
R135	Resistor,chip805		2,2 Ohm	13229
R201	Resistor,chip603		1,8 Kohm	14182
R202	Resistor,chip603		100 Kohm	14104

Copyright © 2004

Partlist for Radioboard TRX3001B/TRDX3001B Date 20-08-2004
Drawing No. 0-3000-03-11 Unit No. 3004

Component	Description		Value	Niros No.
R203	Resistor,chip603		Not used	
R204	Resistor,chip603		1,2 Kohm	14122
R205	Resistor,chip603		220 Ohm	14221
R206	Resistor,chip603		100 Kohm	14104
R207	Resistor,chip603		22 Ohm	14220
R208	Resistor,chip603		56 Ohm	14560
R210	Resistor,chip603		10 Ohm	14100
R211	Resistor,chip603		100 Kohm	14104
R212	Resistor,chip603		5,1 Kohm	14512
R214	Resistor,chip603		4,7 Kohm	14472
R215	Resistor,chip603		1 Kohm	14102
R216	Resistor,chip603		270 Ohm	14271
R217	Resistor,chip603		100 Ohm	14101
R218	Resistor,chip603		1,5 Kohm	14152
R219	Resistor,chip603		100 Ohm	14101
R220	Resistor,chip603		22 Kohm	14223
R221	Resistor,chip603		8,2 Kohm	14822
R222	Resistor,chip603		2,2 Kohm	14222
R223	Resistor,chip603		150 Ohm	14151
R234	Resistor,chip603		1 Kohm	14102
R235	Resistor,chip603		1 Kohm	14102
R236	Resistor,chip603		1 Kohm	14102
R237	Resistor,chip603	S_25	Not used	
	Resistor,chip603	S_12	Not used	
	Resistor,chip603	S_SW	2,2 Kohm	14222
	Resistor,chip603	D_25	Not used	
	Resistor,chip603	D_12	Not used	
	Resistor,chip603	D_SW	2,2 Kohm	14222
	Resistor,chip603	SB_25	Not used	
	Resistor,chip603	SB_12	Not used	
	Resistor,chip603	SB_SW	2,2 Kohm	14222
R238	Resistor,chip603		39 Kohm	14393
R239	Resistor,chip603		Not used	
R240	Resistor,chip603		Not used	
R241	Resistor,chip603		Not used	
R242	Resistor,chip603		Not used	
R243	Resistor,chip603		4,7 Kohm	14472
R244	Resistor,chip603		1,5 Mohm	14155
R245	Resistor,chip603		1,5 Mohm	14155
R246	Resistor,chip603		Not used	
R247	Resistor,chip603		100 Ohm	14101
R248	Resistor,chip603		Not used	
R250	Resistor,chip603		100 Ohm	14101
R251	Resistor,chip603		470 Kohm	14474
R252	Resistor,chip603		56 Kohm	14563
R253	Resistor,chip603		100 Kohm	14104

p. 3 of 31 PC. Board No. 776-8

Copyright © 2004

Partlist for Radioboard TRX3001B/TRDX3001B Date 20-08-2004
Drawing No. 0-3000-03-11 Unit No. 3004

Component	Description	Value	Niros No.
R254	Resistor,chip603	220 Ohm	14221
R255	Resistor,chip603	4,7 Kohm	14472
R256	Resistor,chip603	1 Kohm	14102
R257	Resistor,chip603	1 Kohm	14102
R258	Resistor,chip603	1 Kohm	14102
R259	Resistor,chip603	1,5 Kohm	14152
R260	Resistor,chip603	8,2 Kohm	14822
R261	Resistor,chip603	10 Kohm	14103
R263	Resistor,chip603	2,2 Mohm	14225
R264	Resistor,chip603	1 Mohm	14105
R301	Resistor,chip603	Not used	
R302	Resistor,chip603	Not used	
R303	Resistor,chip603	Not used	
R304	Resistor,chip603	10 Kohm	14103
R305	Resistor,chip603	22 Kohm	14223
R306	Resistor,chip603	100 Ohm	14101
R307	Resistor,chip603	100 Ohm	14101
R308	Resistor,chip603	220 Kohm	14224
R309	Resistor,chip603	56 Kohm	14563
R310	Resistor,chip603	100 Kohm	14104
R311	Resistor,chip603	220 Ohm	14221
R312	Resistor,chip603	100 Kohm	14104
R313	Resistor,chip603	1 Kohm	14102
R314	Resistor,chip603	1 Kohm	14102
R315	Resistor,chip603	1 Kohm	14102
R316	Resistor,chip603	Not used	
R317	Resistor,ntc	Not used	
R318	Resistor,chip603	Not used	
R319	Resistor,chip603	Not used	
R320	Resistor,chip603	Not used	
R321	Resistor,chip603	Not used	
R322	Resistor,chip603	Not used	
R323	Resistor,chip603	Not used	
R324	Resistor,chip603	100 Kohm	14104
R325	Resistor,ntc	Not used	
R326	Resistor,chip603	Not used	
R327	Resistor,chip603	Not used	
R328	Resistor,chip603	100 Kohm	14104
R329	Resistor,chip603	100 Kohm	14104
R330	Resistor,chip603	100 Kohm	14104
R331	Resistor,chip603	4,7 Kohm	14472
R332	Resistor,chip603	47 Kohm	14473
R333	Resistor,chip603	1,5 Kohm	14152
R334	Resistor,chip603	680 Ohm	14681
R335	Resistor,chip603	100 Ohm	14101

p. 4 of 31 PC. Board No. 776-8

Copyright © 2004

Partlist for Radioboard TRX3001B/TRDX3001B Date 20-08-2004
Drawing No. 0-3000-03-11 Unit No. 3004

Component	Description		Value	Niros No.
R336	Resistor,chip603		680 Ohm	14681
R337	Resistor,chip603		150 Ohm	14151
R338	Resistor,chip603		8,2 Kohm	14822
R339	Resistor,chip603		2,2 Kohm	14222
R340	Resistor,chip603		10 Ohm	14100
R341	Resistor,chip603		22 Ohm	14220
R342	Resistor,chip603		220 Ohm	14221
R343	Resistor,chip603		1 Kohm	14102
R344	Resistor,chip603		100 Kohm	14104
R345	Resistor,chip603		5,6 Kohm	14562
R346	Resistor,chip603		680 Kohm	14684
R347	Resistor,chip603		47 Ohm	14470
R348	Resistor,chip603		100 Ohm	14101
R349	Resistor,chip603		1 Kohm	14102
R350	Resistor,chip603		1,2 Kohm	14122
R351	Resistor,chip603		220 Ohm	14221
R352	Resistor,chip603	S_25	10 Kohm	14103
	Resistor,chip603	S_12	10 Kohm	14103
	Resistor,chip603	S_SW	10 Kohm	14103
	Resistor,chip603	D_25	Not used	
	Resistor,chip603	D_12	Not used	
	Resistor,chip603	D_SW	Not used	
	Resistor,chip603	SB_25	10 Kohm	14103
	Resistor,chip603	SB_12	10 Kohm	14103
	Resistor,chip603	SB_SW	10 Kohm	14103
R353	Resistor,chip603	S_25	47 Kohm	14473
	Resistor,chip603	S_12	47 Kohm	14473
	Resistor,chip603	S_SW	47 Kohm	14473
	Resistor,chip603	D_25	Not used	
	Resistor,chip603	D_12	Not used	
	Resistor,chip603	D_SW	Not used	
	Resistor,chip603	SB_25	47 Kohm	14473
	Resistor,chip603	SB_12	47 Kohm	14473
	Resistor,chip603	SB_SW	47 Kohm	14473
R401	Resistor,chip603		47 Kohm	14473
R402	Resistor,chip603		100 Kohm	14104
R403	Resistor,chip603		100 Kohm	14104
R404	Resistor,chip603		4,7 Kohm	14472
R405	Resistor,chip603		560 Ohm	14561
R406	Resistor,chip603		4,7 Kohm	14472
R407	Resistor,chip603		47 Ohm	14470
R408	Resistor,chip603		10 Ohm	14100
R409	Resistor,chip603		330 Ohm	14331
R410	Resistor,chip603		100 Kohm	14104
R411	Resistor,chip603		100 Kohm	14104
R412	Resistor,chip603	S_25	Not used	

p. 5 of 31 PC. Board No. 776-8

Copyright © 2004

Partlist for Radioboard TRX3001B/TRDX3001B Date 20-08-2004
Drawing No. 0-3000-03-11 Unit No. 3004

Component	Description		Value	Niros No.
	Resistor,chip603	S_12	Not used	
	Resistor,chip603	S_SW	6,8 Kohm	14682
	Resistor,chip603	D_25	Not used	
	Resistor,chip603	D_12	Not used	
	Resistor,chip603	D_SW	6,8 Kohm	14682
	Resistor,chip603	SB_25	Not used	
	Resistor,chip603	SB_12	Not used	
	Resistor,chip603	SB_SW	6,8 Kohm	14682
R413	Resistor,chip603	S_25	Not used	
	Resistor,chip603	S_12	Not used	
	Resistor,chip603	S_SW	2,2 Kohm	14222
	Resistor,chip603	D_25	Not used	
	Resistor,chip603	D_12	Not used	
	Resistor,chip603	D_SW	2,2 Kohm	14222
	Resistor,chip603	SB_25	Not used	
	Resistor,chip603	SB_12	Not used	
	Resistor,chip603	SB_SW	2,2 Kohm	14222
R414	Resistor,chip603	S_25	Not used	
	Resistor,chip603	S_12	Not used	
	Resistor,chip603	S_SW	470 Ohm	14471
	Resistor,chip603	D_25	Not used	
	Resistor,chip603	D_12	Not used	
	Resistor,chip603	D_SW	470 Ohm	14471
	Resistor,chip603	SB_25	Not used	
	Resistor,chip603	SB_12	Not used	
	Resistor,chip603	SB_SW	470 Ohm	14471
R415	Resistor,chip603	S_25	Not used	
	Resistor,chip603	S_12	Not used	
	Resistor,chip603	S_SW	4,7 Kohm	14472
	Resistor,chip603	D_25	Not used	
	Resistor,chip603	D_12	Not used	
	Resistor,chip603	D_SW	4,7 Kohm	14472
	Resistor,chip603	SB_25	Not used	
	Resistor,chip603	SB_12	Not used	
	Resistor,chip603	SB_SW	4,7 Kohm	14472
R416	Resistor,chip603	S_25	Not used	
	Resistor,chip603	S_12	Not used	
	Resistor,chip603	S_SW	390 Ohm	14391
	Resistor,chip603	D_25	Not used	
	Resistor,chip603	D_12	Not used	
	Resistor,chip603	D_SW	390 Ohm	14391
	Resistor,chip603	SB_25	Not used	
	Resistor,chip603	SB_12	Not used	
	Resistor,chip603	SB_SW	390 Ohm	14391
R417	Resistor,chip603	S_25	Not used	
	Resistor,chip603	S_12	Not used	
	Resistor,chip603	S_SW	1,8 Kohm	14182
	Resistor,chip603	D_25	Not used	

Copyright © 2004

Partlist for Radioboard TRX3001B/TRDX3001B Date 20-08-2004
Drawing No. 0-3000-03-11 Unit No. 3004

Component	Description		Value	Niros No.
	Resistor,chip603	D_12	Not used	
	Resistor,chip603	D_SW	1,8 Kohm	14182
	Resistor,chip603	SB_25	Not used	
	Resistor,chip603	SB_12	Not used	
	Resistor,chip603	SB_SW	1,8 Kohm	14182
R418	Resistor,chip603	S_25	Not used	
	Resistor,chip603	S_12	Not used	
	Resistor,chip603	S_SW	330 Ohm	14331
	Resistor,chip603	D_25	Not used	
	Resistor,chip603	D_12	Not used	
	Resistor,chip603	D_SW	330 Ohm	14331
	Resistor,chip603	SB_25	Not used	
	Resistor,chip603	SB_12	Not used	
	Resistor,chip603	SB_SW	330 Ohm	14331
R419	Resistor,chip603	S_25	Not used	
	Resistor,chip603	S_12	Not used	
	Resistor,chip603	S_SW	1,5 Kohm	14152
	Resistor,chip603	D_25	Not used	
	Resistor,chip603	D_12	Not used	
	Resistor,chip603	D_SW	1,5 Kohm	14152
	Resistor,chip603	SB_25	Not used	
	Resistor,chip603	SB_12	Not used	
	Resistor,chip603	SB_SW	1,5 Kohm	14152
R420	Resistor,chip603	S_25	Not used	
	Resistor,chip603	S_12	Not used	
	Resistor,chip603	S_SW	1,8 Kohm	14182
	Resistor,chip603	D_25	Not used	
	Resistor,chip603	D_12	Not used	
	Resistor,chip603	D_SW	1,8 Kohm	14182
	Resistor,chip603	SB_25	Not used	
	Resistor,chip603	SB_12	Not used	
	Resistor,chip603	SB_SW	1,8 Kohm	14182
R421	Resistor,chip603	S_25	Not used	
	Resistor,chip603	S_12	Not used	
	Resistor,chip603	S_SW	680 Ohm	14681
	Resistor,chip603	D_25	Not used	
	Resistor,chip603	D_12	Not used	
	Resistor,chip603	D_SW	680 Ohm	14681
	Resistor,chip603	SB_25	Not used	
	Resistor,chip603	SB_12	Not used	
	Resistor,chip603	SB_SW	680 Ohm	14681
R422	Resistor,chip603	S_25	1 Kohm	14102
	Resistor,chip603	S_12	1,5 Kohm	14152
	Resistor,chip603	S_SW	10 Kohm	14103
	Resistor,chip603	D_25	1 Kohm	14102
	Resistor,chip603	D_12	1,5 Kohm	14152
	Resistor,chip603	D_SW	10 Kohm	14103
	Resistor,chip603	SB_25	1 Kohm	14102

Copyright © 2004

Partlist for Radioboard TRX3001B/TRDX3001B Date 20-08-2004
Drawing No. 0-3000-03-11 Unit No. 3004

Component	Description		Value	Niros No.
	Resistor,chip603	SB_12	1,5 Kohm	14152
	Resistor,chip603	SB_SW	10 Kohm	14103
R423	Resistor,chip603		120 Ohm	14121
R424	Resistor,chip603		150 Ohm	14151
R425	Resistor,chip603		470 Ohm	14471
R426	Resistor,chip603		12 Ohm	14120
R427	Resistor,chip603		470 Ohm	14471
R428	Resistor,chip603		330 Ohm	14331
R429	Resistor,chip603		47 Ohm	14470
R430	Resistor,chip603		10 Ohm	14100
R431	Resistor,chip603		10 Ohm	14100
R432	Resistor,chip603		2,2 Kohm	14222
R433	Resistor,chip603		4,7 Kohm	14472
R434	Resistor,chip603	S_25	Not used	
	Resistor,chip603	S_12	Not used	
	Resistor,chip603	S_SW	100 Kohm	14104
	Resistor,chip603	D_25	Not used	
	Resistor,chip603	D_12	Not used	
	Resistor,chip603	D_SW	100 Kohm	14104
	Resistor,chip603	SB_25	Not used	
	Resistor,chip603	SB_12	Not used	
	Resistor,chip603	SB_SW	100 Kohm	14104
R435	Resistor,chip603	S_25	Not used	
	Resistor,chip603	S_12	Not used	
	Resistor,chip603	S_SW	100 Kohm	14104
	Resistor,chip603	D_25	Not used	
	Resistor,chip603	D_12	Not used	
	Resistor,chip603	D_SW	100 Kohm	14104
	Resistor,chip603	SB_25	Not used	
	Resistor,chip603	SB_12	Not used	
	Resistor,chip603	SB_SW	100 Kohm	14104
R436	Resistor,chip603	S_25	820 Ohm	14821
	Resistor,chip603	S_12	Not used	
	Resistor,chip603	S_SW	Not used	
	Resistor,chip603	D_25	820 Ohm	14821
	Resistor,chip603	D_12	Not used	
	Resistor,chip603	D_SW	Not used	
	Resistor,chip603	SB_25	820 Ohm	14821
	Resistor,chip603	SB_12	Not used	
	Resistor,chip603	SB_SW	Not used	
R437	Resistor,chip603	S_25	Not used	
	Resistor,chip603	S_12	330 Ohm	14331
	Resistor,chip603	S_SW	Not used	
	Resistor,chip603	D_25	Not used	
	Resistor,chip603	D_12	330 Ohm	14331
	Resistor,chip603	D_SW	Not used	
	Resistor,chip603	SB_25	Not used	
	Resistor,chip603	SB_12	330 Ohm	14331

Copyright © 2004

Partlist for Radioboard TRX3001B/TRDX3001B Date 20-08-2004
Drawing No. 0-3000-03-11 Unit No. 3004

Component	Description	Value	Niros No.
	Resistor,chip603 SB_SW	Not used	
R501	Resistor,ptc	0,5 A	83364
R502	Resistor,chip603	15 Kohm	14153
R503	Resistor,chip1206	390 Ohm	12391
R504	Resistor,chip1206	390 Ohm	12391
R505	Resistor,chip603	100 Kohm	14104
R506	Resistor,chip603	68 Kohm	14683
R507	Resistor,chip603	150 Kohm	14154
R508	Resistor,chip603	390 Kohm	14394
R509	Resistor,chip603	1 Mohm	14105
R510	Resistor,chip603	680 Ohm	14681
R511	Resistor,chip603_1%	1 Kohm	10926
R512	Resistor,chip603_1%	4,53 Kohm	10927
R513	Resistor,chip603	47 Ohm	14470
R514	Resistor,chip603 S_25	Not used	
	Resistor,chip603 S_12	Not used	
	Resistor,chip603 S_SW	470 Ohm	14471
	Resistor,chip603 D_25	Not used	
	Resistor,chip603 D_12	Not used	
	Resistor,chip603 D_SW	470 Ohm	14471
	Resistor,chip603 SB_25	Not used	
	Resistor,chip603 SB_12	Not used	
	Resistor,chip603 SB_SW	470 Ohm	14471
R515	Resistor,chip603 S_25	Not used	
	Resistor,chip603 S_12	Not used	
	Resistor,chip603 S_SW	6,8 Kohm	14682
	Resistor,chip603 D_25	Not used	
	Resistor,chip603 D_12	Not used	
	Resistor,chip603 D_SW	6,8 Kohm	14682
	Resistor,chip603 SB_25	Not used	
	Resistor,chip603 SB_12	Not used	
	Resistor,chip603 SB_SW	6,8 Kohm	14682
R516	Resistor,chip603 S_25	Not used	
	Resistor,chip603 S_12	Not used	
	Resistor,chip603 S_SW	6,8 Kohm	14682
	Resistor,chip603 D_25	Not used	
	Resistor,chip603 D_12	Not used	
	Resistor,chip603 D_SW	6,8 Kohm	14682
	Resistor,chip603 SB_25	Not used	
	Resistor,chip603 SB_12	Not used	
	Resistor,chip603 SB_SW	6,8 Kohm	14682
R517	Resistor,chip603 S_25	Not used	
	Resistor,chip603 S_12	Not used	
	Resistor,chip603 S_SW	6,8 Kohm	14682
	Resistor,chip603 D_25	Not used	
	Resistor,chip603 D_12	Not used	
	Resistor,chip603 D_SW	6,8 Kohm	14682
	Resistor,chip603 SB_25	Not used	

p. 9 of 31 PC. Board No. 776-8

Copyright © 2004

Partlist for Radioboard TRX3001B/TRDX3001B Date 20-08-2004
Drawing No. 0-3000-03-11 Unit No. 3004

Component	Description	Value	Niros No.
	Resistor,chip603 SB_12	Not used	
	Resistor,chip603 SB_SW	6,8 Kohm	14682
R518	Resistor,chip603 S_25	Not used	
	Resistor,chip603 S_12	Not used	
	Resistor,chip603 S_SW	6,8 Kohm	14682
	Resistor,chip603 D_25	Not used	
	Resistor,chip603 D_12	Not used	
	Resistor,chip603 D_SW	6,8 Kohm	14682
	Resistor,chip603 SB_25	Not used	
	Resistor,chip603 SB_12	Not used	
	Resistor,chip603 SB_SW	6,8 Kohm	14682
R519	Resistor,chip603 S_25	Not used	
	Resistor,chip603 S_12	Not used	
	Resistor,chip603 S_SW	6,8 Kohm	14682
	Resistor,chip603 D_25	Not used	
	Resistor,chip603 D_12	Not used	
	Resistor,chip603 D_SW	6,8 Kohm	14682
	Resistor,chip603 SB_25	Not used	
	Resistor,chip603 SB_12	Not used	
	Resistor,chip603 SB_SW	6,8 Kohm	14682
R520	Resistor,chip603 S_25	Not used	
	Resistor,chip603 S_12	Not used	
	Resistor,chip603 S_SW	470 Ohm	14471
	Resistor,chip603 D_25	Not used	
	Resistor,chip603 D_12	Not used	
	Resistor,chip603 D_SW	470 Ohm	14471
	Resistor,chip603 SB_25	Not used	
	Resistor,chip603 SB_12	Not used	
	Resistor,chip603 SB_SW	470 Ohm	14471
R521	Resistor,chip603 S_25	Not used	
	Resistor,chip603 S_12	Not used	
	Resistor,chip603 S_SW	6,8 Kohm	14682
	Resistor,chip603 D_25	Not used	
	Resistor,chip603 D_12	Not used	
	Resistor,chip603 D_SW	6,8 Kohm	14682
	Resistor,chip603 SB_25	Not used	
	Resistor,chip603 SB_12	Not used	
	Resistor,chip603 SB_SW	6,8 Kohm	14682
R522	Resistor,chip603	22 Kohm	14223
R523	Resistor,chip603	47 Ohm	14470
R524	Resistor,chip603	2,2 Kohm	14222
R525	Resistor,chip603	4,7 Kohm	14472
R526	Resistor,chip603	2,2 Kohm	14222
R527	Resistor,chip603	470 Kohm	14474
R528	Resistor,chip603	15 Kohm	14153
R529	Resistor,chip603	1 Mohm	14105
R530	Resistor,chip603	390 Kohm	14394
R531	Resistor,chip603	2,2 Kohm	14222

p. 10 of 31 PC. Board No. 776-8

Copyright © 2004

Partlist for Radioboard TRX3001B/TRDX3001B Date 20-08-2004
Drawing No. 0-3000-03-11 Unit No. 3004

Component	Description		Value	Niros No.
R532	Resistor,chip603	S_25	6,8 Kohm	14682
	Resistor,chip603	S_12	3,3 Kohm	14332
	Resistor,chip603	S_SW	6,8 Kohm	14682
	Resistor,chip603	D_25	6,8 Kohm	14682
	Resistor,chip603	D_12	3,3 Kohm	14332
	Resistor,chip603	D_SW	6,8 Kohm	14682
	Resistor,chip603	SB_25	6,8 Kohm	14682
	Resistor,chip603	SB_12	3,3 Kohm	14332
	Resistor,chip603	SB_SW	6,8 Kohm	14682
R533	Resistor,chip603	S_25	Not used	
	Resistor,chip603	S_12	Not used	
	Resistor,chip603	S_SW	6,8 Kohm	14682
	Resistor,chip603	D_25	Not used	
	Resistor,chip603	D_12	Not used	
	Resistor,chip603	D_SW	6,8 Kohm	14682
	Resistor,chip603	SB_25	Not used	
	Resistor,chip603	SB_12	Not used	
	Resistor,chip603	SB_SW	6,8 Kohm	14682
R534	Resistor,chip603		47 Kohm	14473
R535	Resistor,chip603		1 Mohm	14105
R536	Resistor,chip603		820 Kohm	14824
R537	Resistor,chip603		10 Kohm	14103
R538	Resistor,chip603		10 Kohm	14103
R539	Resistor,chip805		10 Mohm	13106
R540	Resistor,chip603		1,5 Mohm	14155
R541	Resistor,chip603		820 Kohm	14824
R542	Resistor,chip603		1 Mohm	14105
R543	Resistor,chip603		180 Kohm	14184
R544	Resistor,chip603	S_25	0 Ohm	14000
	Resistor,chip603	S_12	0 Ohm	14000
	Resistor,chip603	S_SW	0 Ohm	14000
	Resistor,chip603	D_25	Not used	
	Resistor,chip603	D_12	Not used	
	Resistor,chip603	D_SW	Not used	
	Resistor,chip603	SB_25	Not used	
	Resistor,chip603	SB_12	Not used	
	Resistor,chip603	SB_SW	Not used	
C101	Capacitor,chip603		10 nF	21103
C102	Capacitor,chip603		47 pF	21470
C103	Capacitor,chip603		10 nF	21103
C104	Capacitor,chip603		10 nF	21103
C105	Capacitor,chip603		10 nF	21103
C106	Capacitor,chip603		1 nF	21102
C107	Capacitor,chip603		1 nF	21102
C108	Capacitor,chip603		220 pF	21221
C109	Capacitor,chip603		10 nF	21103

p. 11 of 31 PC. Board No. 776-8

Copyright © 2004

Partlist for Radioboard TRX3001B/TRDX3001B Date 20-08-2004
Drawing No. 0-3000-03-11 Unit No. 3004

Component	Description	Value	Niros No.
C110	Capacitor,chip603	120 pF	21121
C111	Capacitor,chip603	10 pF	21100
C112	Capacitor,ctan_e	22 uF/35V	25624
C113	Capacitor,chip603	4,7 nF	21472
C114	Capacitor,chip603	1 nF	21102
C115	Capacitor,chip603 S_25	1 nF	21102
	Capacitor,chip603 S_12	1 nF	21102
	Capacitor,chip603 S_SW	1 nF	21102
	Capacitor,chip603 D_25	Not used	
	Capacitor,chip603 D_12	Not used	
	Capacitor,chip603 D_SW	Not used	
	Capacitor,chip603 SB_25	1 nF	21102
	Capacitor,chip603 SB_12	1 nF	21102
	Capacitor,chip603 SB_SW	1 nF	21102
C116	Capacitor,chip603	4,7 nF	21472
C117	Capacitor,ctan_e	22 uF/35V	25624
C118	Capacitor,chip603	1 nF	21102
C119	Capacitor,chip603	4,7 pF	21479
C120	Capacitor,chip603 S_25	1 nF	21102
	Capacitor,chip603 S_12	1 nF	21102
	Capacitor,chip603 S_SW	1 nF	21102
	Capacitor,chip603 D_25	Not used	
	Capacitor,chip603 D_12	Not used	
	Capacitor,chip603 D_SW	Not used	
	Capacitor,chip603 SB_25	1 nF	21102
	Capacitor,chip603 SB_12	1 nF	21102
	Capacitor,chip603 SB_SW	1 nF	21102
C121	Capacitor,chip603 S_25	1 nF	21102
	Capacitor,chip603 S_12	1 nF	21102
	Capacitor,chip603 S_SW	1 nF	21102
	Capacitor,chip603 D_25	Not used	
	Capacitor,chip603 D_12	Not used	
	Capacitor,chip603 D_SW	Not used	
	Capacitor,chip603 SB_25	1 nF	21102
	Capacitor,chip603 SB_12	1 nF	21102
	Capacitor,chip603 SB_SW	1 nF	21102
C122	Capacitor,chip603_pwr	18 pF	20825
C123	Capacitor,chip603	2,7 pF	21279
C124	Capacitor,chip805_pwr	39 pF	20826
C125	Capacitor,chip603_pwr	12 pF	20824
C126	Capacitor,chip805_pwr	39 pF	20826
C127	Capacitor,chip603_pwr	12 pF	20824
C128	Capacitor,chip603_pwr	18 pF	20825
C129	Capacitor,chip603	1 nF	21102
C130	Capacitor,chip603	1 nF	21102
C131	Capacitor,chip603	1 nF	21102
C132	Capacitor,chip603	2,2 nF	21222

p. 12 of 31 PC. Board No. 776-8

Copyright © 2004

Partlist for Radioboard TRX3001B/TRDX3001B Date 20-08-2004
Drawing No. 0-3000-03-11 Unit No. 3004

Component	Description	Value	Niros No.
C133	Capacitor,chip603	47 nF	21473
C134	Capacitor,chip603_ln	4,7 nF	20803
C135	Capacitor,chip1206	330 nF	20664
C136	Capacitor,chip603	47 nF	21473
C137	Capacitor,ctan_a	6,8 uF/10V	25619
C138	Capacitor,chip1206	330 nF	20664
C139	Capacitor,ctan_c	10 uF/25V	25623
C140	Capacitor,chip1206	330 nF	20664
C141	Capacitor,ctan_c	10 uF/25V	25623
C142	Capacitor,chip603	100 pF	21101
C143	Capacitot,lyt	330 uF/25V	26027
C144	Capacitot,lyt	330 uF/25V	26027
C145	Capacitor,chip603	4,7 pF	21479
C146	Capacitor,chip603 S_25	1 nF	21102
	Capacitor,chip603 S_12	1 nF	21102
	Capacitor,chip603 S_SW	1 nF	21102
	Capacitor,chip603 D_25	Not used	
	Capacitor,chip603 D_12	Not used	
	Capacitor,chip603 D_SW	Not used	
	Capacitor,chip603 SB_25	1 nF	21102
	Capacitor,chip603 SB_12	1 nF	21102
	Capacitor,chip603 SB_SW	1 nF	21102
C147	Capacitor,chip603	1 nF	21102
C148	Capacitor,chip603	1 nF	21102
C149	Capacitor,chip603	1 nF	21102
C150	Capacitor,chip603	5,6 pF	21569
C151	Capacitor,chip603	330 pF	21331
C152	Capacitor,chip603	1 nF	21102
C153	Capacitor,chip1206	330 nF	20664
C154	Capacitor,chip603	10 nF	21103
C155	Capacitor,chip603	1 nF	21102
C156	Capacitor,chip603	100 pF	21101
C201	Capacitor,chip603	1 nF	21102
C203	Capacitor,chip603_ln	4,7 nF	20803
C204	Capacitor,chip603	1 pF	21109
C205	Capacitor,chip603_ln	4,7 nF	20803
C206	Capacitor,chip603_2%	Not used	
C207	Capacitor,chip603	82 pF	21820
C208	Capacitor,chip603_2%	Not used	
C209	Capacitor,chip603_2%	8,2 pF	22829
C210	Capacitor,chip603_n750	47 pF	20816
C211	Capacitor,ctan_a	2,2 uF/16V	25613
C212	Capacitor,chip603	1,8 pF	21189
C213	Capacitor,chip603_n750	15 pF	20808
C214	Capacitor,chip603	27 pF	21270
C215	Capacitor,chip603_ln	4,7 nF	20803

Copyright © 2004

Partlist for Radioboard TRX3001B/TRDX3001B Date 20-08-2004
Drawing No. 0-3000-03-11 Unit No. 3004

Component	Description	Value	Niros No.
C216	Capacitor,ctan_a	6,8 uF/10V	25619
C217	Capacitor,chip603	10 nF	21103
C218	Capacitor,chip603	82 pF	21820
C219	Capacitor,chip603	100 pF	21101
C220	Capacitor,chip603	10 nF	21103
C221	Capacitor,chip603_2%	22 pF	22220
C222	Capacitor,chip603	10 nF	21103
C223	Capacitor,chip603	10 nF	21103
C224	Capacitor,chip603	1 nF	21102
C225	Capacitor,chip603	10 nF	21103
C226	Capacitor,chip603	10 nF	21103
C227	Capacitor,chip603	1 nF	21102
C228	Capacitor,chip603	1 nF	21102
C230	Capacitor,chip603	47 nF	21473
C232	Capacitor,chip603	220 pF	21221
C234	Capacitor,ctan_a	1 uF/20V	25617
C235	Capacitor,chip603_ln	Not used	
C236	Capacitor,chip603_ln	Not used	
C237	Capacitor,chip603_ln	Not used	
C238	Capacitor,chip1206_ln	47 nF	20805
C239	Capacitor,chip2824	470 nF	20823
C240	Capacitor,chip1206_ln	47 nF	20805
C241	Capacitor,ctan_e	Not used	
C242	Capacitor,ctan_a	6,8 uF/10V	25619
C243	Capacitor,chip603	1 nF	21102
C244	Capacitor,chip805	330 nF	20662
C245	Capacitor,ctan_a	6,8 uF/10V	25619
C246	Capacitor,chip603	10 nF	21103
C247	Capacitor,chip603	10 nF	21103
C249	Capacitor,chip603	10 nF	21103
C250	Capacitor,chip603	100 pF	21101
C251	Capacitor,chip603	220 pF	21221
C252	Capacitor,chip603	220 pF	21221
C253	Capacitor,chip603	220 pF	21221
C254	Capacitor,chip603	10 nF	21103
C255	Capacitor,chip603	10 nF	21103
C256	Capacitor,chip1206_ln	22 nF	20837
C257	Capacitor,chip603	100 pF	21101
C258	Capacitor,chip603	Not used	
C301	Capacitor,chip603_ln	Not used	
C302	Capacitor,chip603_ln	Not used	
C303	Capacitor,chip603_ln	Not used	
C304	Capacitor,chip603	10 nF	21103
C305	Capacitor,chip1206_ln	3,9 nF	20861
C306	Capacitor,chip1206_ln	39 nF	20838

Copyright © 2004

Partlist for Radioboard TRX3001B/TRDX3001B Date 20-08-2004
Drawing No. 0-3000-03-11 Unit No. 3004

Component	Description	Value	Niros No.
C307	Capacitor,ctan_a	6,8 uF/10V	25619
C308	Capacitor,chip603	1 nF	21102
C309	Capacitor,chip805	330 nF	20662
C310	Capacitor,ctan_a	6,8 uF/10V	25619
C311	Capacitor,chip603	10 nF	21103
C312	Capacitor,chip603	1 nF	21102
C313	Capacitor,chip603	10 nF	21103
C315	Capacitor,chip603	100 pF	21101
C317	Capacitor,chip603	Not used	
C318	Capacitor,chip603	Not used	
C319	Capacitor,chip603	220 pF	21221
C320	Capacitor,chip603	Not used	
C321	Capacitor,chip603	Not used	
C322	Capacitor,chip603	Not used	
C323	Capacitor,chip603	47 nF	21473
C324	Capacitor,chip603	47 nF	21473
C325	Capacitor,chip603	Not used	
C326	Capacitor,chip603	Not used	
C327	Capacitor,chip603	Not used	
C328	Capacitor,chip603	Not used	
C329	Capacitor,chip805	100 nF	20654
C330	Capacitor,chip603	Not used	
C331	Capacitor,chip603	33 pF	21330
C332	Capacitor,chip603	22 pF	21220
C333	Capacitor,chip603	47 pF	21470
C334	Capacitor,chip603	Selected	
C335	Capacitor,chip603	150 pF	21151
C336	Capacitor,chip603	150 pF	21151
C337	Capacitor,chip603	47 pF	21470
C338	Capacitor,chip603	1 nF	21102
C339	Capacitor,chip603	10 nF	21103
C340	Capacitor,chip603	1 nF	21102
C341	Capacitor,chip603	1 nF	21102
C342	Capacitor,chip603_ln	4,7 nF	20803
C343	Capacitor,ctan_a	6,8 uF/10V	25619
C344	Capacitor,chip603_n750	15 pF	20808
C345	Capacitor,chip603_n750	15 pF	20808
C346	Capacitor,chip603	1 pF	21109
C347	Capacitor,ctan_a	2,2 uF/16V	25613
C348	Capacitor,chip603	10 nF	21103
C349	Capacitor,chip603_n750	47 pF	20816
C350	Capacitor,chip603_2%	15 pF	22150
C351	Capacitor,chip603	Selected	
C352	Capacitor,chip603_2%	68 pF	22680
C353	Capacitor,chip603_2%	15 pF	22150

p. 15 of 31 PC. Board No. 776-8

Copyright © 2004

Partlist for Radioboard TRX3001B/TRDX3001B Date 20-08-2004
Drawing No. 0-3000-03-11 Unit No. 3004

Component	Description	Value	Niros No.
C354	Capacitor,chip603_ln	4,7 nF	20803
C355	Capacitor,ctan_a	6,8 uF/10V	25619
C356	Capacitor,ctan_a	6,8 uF/10V	25619
C357	Capacitor,chip603	220 pF	21221
C358	Capacitor,ctan_a	6,8 uF/10V	25619
C359	Capacitor,ctan_a	2,2 uF/16V	25613
C360	Capacitor,chip1206_ln	22 nF	20837
C361	Capacitor,chip603	100 pF	21101
C362	Capacitor,chip603	Not used	
C363	Capacitor,chip805 S_25	330 nF	20662
	Capacitor,chip805 S_12	330 nF	20662
	Capacitor,chip805 S_SW	330 nF	20662
	Capacitor,chip805 D_25	Not used	
	Capacitor,chip805 D_12	Not used	
	Capacitor,chip805 D_SW	Not used	
	Capacitor,chip805 SB_25	330 nF	20662
	Capacitor,chip805 SB_12	330 nF	20662
	Capacitor,chip805 SB_SW	330 nF	20662
C364	Capacitor,chip603 S_25	22 pF	21220
	Capacitor,chip603 S_12	22 pF	21220
	Capacitor,chip603 S_SW	22 pF	21220
	Capacitor,chip603 D_25	Not used	
	Capacitor,chip603 D_12	Not used	
	Capacitor,chip603 D_SW	Not used	
	Capacitor,chip603 SB_25	22 pF	21220
	Capacitor,chip603 SB_12	22 pF	21220
	Capacitor,chip603 SB_SW	22 pF	21220
C365	Capacitor,chip603 S_25	22 pF	21220
	Capacitor,chip603 S_12	22 pF	21220
	Capacitor,chip603 S_SW	22 pF	21220
	Capacitor,chip603 D_25	Not used	
	Capacitor,chip603 D_12	Not used	
	Capacitor,chip603 D_SW	Not used	
	Capacitor,chip603 SB_25	22 pF	21220
	Capacitor,chip603 SB_12	22 pF	21220
	Capacitor,chip603 SB_SW	22 pF	21220
C366	Capacitor,chip805 S_25	330 nF	20662
	Capacitor,chip805 S_12	330 nF	20662
	Capacitor,chip805 S_SW	330 nF	20662
	Capacitor,chip805 D_25	Not used	
	Capacitor,chip805 D_12	Not used	
	Capacitor,chip805 D_SW	Not used	
	Capacitor,chip805 SB_25	330 nF	20662
	Capacitor,chip805 SB_12	330 nF	20662
	Capacitor,chip805 SB_SW	330 nF	20662
C367	Capacitor,chip805 S_25	330 nF	20662
	Capacitor,chip805 S_12	330 nF	20662
	Capacitor,chip805 S_SW	330 nF	20662

p. 16 of 31 PC. Board No. 776-8

Copyright © 2004

Partlist for Radioboard TRX3001B/TRDX3001B Date 20-08-2004
Drawing No. 0-3000-03-11 Unit No. 3004

Component	Description	Value	Niros No.
	Capacitor,chip805 D_25	Not used	
	Capacitor,chip805 D_12	Not used	
	Capacitor,chip805 D_SW	Not used	
	Capacitor,chip805 SB_25	330 nF	20662
	Capacitor,chip805 SB_12	330 nF	20662
	Capacitor,chip805 SB_SW	330 nF	20662
C401	Capacitor,chip603_2%	8,2 pF	22829
C402	Capacitor,chip603	10 nF	21103
C403	Capacitor,chip603	100 pF	21101
C404	Capacitor,chip603_2%	2,2 pF	22229
C405	Capacitor,chip603	56 pF	21560
C406	Capacitor,chip603	100 pF	21101
C407	Capacitor,chip603_2%	8,2 pF	22829
C408	Capacitor,chip603	1 nF	21102
C409	Capacitor,chip603	10 nF	21103
C410	Capacitor,chip603	1 nF	21102
C411	Capacitor,chip603	27 pF	21270
C412	Capacitor,chip603_2%	8,2 pF	22829
C413	Capacitor,chip603	100 pF	21101
C414	Capacitor,chip603_2%	1,8 pF	22189
C415	Capacitor,chip603	56 pF	21560
C416	Capacitor,chip603_2%	100 pF	22101
C417	Capacitor,chip603	10 nF	21103
C418	Capacitor,chip603_2%	8,2 pF	22829
C419	Capacitor,chip603	10 nF	21103
C420	Capacitor,chip603 S_25	10 nF	21103
	Capacitor,chip603 S_12	Not used	
	Capacitor,chip603 S_SW	Not used	
	Capacitor,chip603 D_25	10 nF	21103
	Capacitor,chip603 D_12	Not used	
	Capacitor,chip603 D_SW	Not used	
	Capacitor,chip603 SB_25	10 nF	21103
	Capacitor,chip603 SB_12	Not used	
	Capacitor,chip603 SB_SW	Not used	
C421	Capacitor,chip603 S_25	Not used	
	Capacitor,chip603 S_12	10 nF	21103
	Capacitor,chip603 S_SW	Not used	
	Capacitor,chip603 D_25	Not used	
	Capacitor,chip603 D_12	10 nF	21103
	Capacitor,chip603 D_SW	Not used	
	Capacitor,chip603 SB_25	Not used	
	Capacitor,chip603 SB_12	10 nF	21103
	Capacitor,chip603 SB_SW	Not used	
C422	Capacitor,chip603 S_25	Not used	
	Capacitor,chip603 S_12	Not used	
	Capacitor,chip603 S_SW	10 nF	21103
	Capacitor,chip603 D_25	Not used	

p. 17 of 31 PC. Board No. 776-8

Copyright © 2004

Partlist for Radioboard TRX3001B/TRDX3001B Date 20-08-2004
Drawing No. 0-3000-03-11 Unit No. 3004

Component	Description	Value	Niros No.
	Capacitor,chip603 D_12	Not used	
	Capacitor,chip603 D_SW	10 nF	21103
	Capacitor,chip603 SB_25	Not used	
	Capacitor,chip603 SB_12	Not used	
	Capacitor,chip603 SB_SW	10 nF	21103
C423	Capacitor,chip603 S_25	Not used	
	Capacitor,chip603 S_12	Not used	
	Capacitor,chip603 S_SW	10 nF	21103
	Capacitor,chip603 D_25	Not used	
	Capacitor,chip603 D_12	Not used	
	Capacitor,chip603 D_SW	10 nF	21103
	Capacitor,chip603 SB_25	Not used	
	Capacitor,chip603 SB_12	Not used	
	Capacitor,chip603 SB_SW	10 nF	21103
C424	Capacitor,chip603 S_25	Not used	
	Capacitor,chip603 S_12	Not used	
	Capacitor,chip603 S_SW	10 nF	21103
	Capacitor,chip603 D_25	Not used	
	Capacitor,chip603 D_12	Not used	
	Capacitor,chip603 D_SW	10 nF	21103
	Capacitor,chip603 SB_25	Not used	
	Capacitor,chip603 SB_12	Not used	
	Capacitor,chip603 SB_SW	10 nF	21103
C425	Capacitor,chip603 S_25	Not used	
	Capacitor,chip603 S_12	6,8 pF	21689
	Capacitor,chip603 S_SW	6,8 pF	21689
	Capacitor,chip603 D_25	Not used	
	Capacitor,chip603 D_12	6,8 pF	21689
	Capacitor,chip603 D_SW	6,8 pF	21689
	Capacitor,chip603 SB_25	Not used	
	Capacitor,chip603 SB_12	6,8 pF	21689
	Capacitor,chip603 SB_SW	6,8 pF	21689
C426	Capacitor,chip603 S_25	Not used	
	Capacitor,chip603 S_12	Not used	
	Capacitor,chip603 S_SW	10 nF	21103
	Capacitor,chip603 D_25	Not used	
	Capacitor,chip603 D_12	Not used	
	Capacitor,chip603 D_SW	10 nF	21103
	Capacitor,chip603 SB_25	Not used	
	Capacitor,chip603 SB_12	Not used	
	Capacitor,chip603 SB_SW	10 nF	21103
C427	Capacitor,chip603 S_25	8,2 pF	21829
	Capacitor,chip603 S_12	Not used	
	Capacitor,chip603 S_SW	8,2 pF	21829
	Capacitor,chip603 D_25	8,2 pF	21829
	Capacitor,chip603 D_12	Not used	
	Capacitor,chip603 D_SW	8,2 pF	21829
	Capacitor,chip603 SB_25	8,2 pF	21829

Copyright © 2004

Partlist for Radioboard TRX3001B/TRDX3001B Date 20-08-2004
Drawing No. 0-3000-03-11 Unit No. 3004

Component	Description	Value	Niros No.
	Capacitor,chip603 SB_12	Not used	
	Capacitor,chip603 SB_SW	8,2 pF	21829
C428	Capacitor,chip603 S_25	Not used	
	Capacitor,chip603 S_12	18 pF	21180
	Capacitor,chip603 S_SW	18 pF	21180
	Capacitor,chip603 D_25	Not used	
	Capacitor,chip603 D_12	18 pF	21180
	Capacitor,chip603 D_SW	18 pF	21180
	Capacitor,chip603 SB_25	Not used	
	Capacitor,chip603 SB_12	18 pF	21180
	Capacitor,chip603 SB_SW	18 pF	21180
C429	Capacitor,chip603 S_25	Not used	
	Capacitor,chip603 S_12	6,8 pF	21689
	Capacitor,chip603 S_SW	6,8 pF	21689
	Capacitor,chip603 D_25	Not used	
	Capacitor,chip603 D_12	6,8 pF	21689
	Capacitor,chip603 D_SW	6,8 pF	21689
	Capacitor,chip603 SB_25	Not used	
	Capacitor,chip603 SB_12	6,8 pF	21689
	Capacitor,chip603 SB_SW	6,8 pF	21689
C430	Capacitor,chip603 S_25	Not used	
	Capacitor,chip603 S_12	Not used	
	Capacitor,chip603 S_SW	10 nF	21103
	Capacitor,chip603 D_25	Not used	
	Capacitor,chip603 D_12	Not used	
	Capacitor,chip603 D_SW	10 nF	21103
	Capacitor,chip603 SB_25	Not used	
	Capacitor,chip603 SB_12	Not used	
	Capacitor,chip603 SB_SW	10 nF	21103
C431	Capacitor,chip603 S_25	Not used	
	Capacitor,chip603 S_12	Not used	
	Capacitor,chip603 S_SW	10 nF	21103
	Capacitor,chip603 D_25	Not used	
	Capacitor,chip603 D_12	Not used	
	Capacitor,chip603 D_SW	10 nF	21103
	Capacitor,chip603 SB_25	Not used	
	Capacitor,chip603 SB_12	Not used	
	Capacitor,chip603 SB_SW	10 nF	21103
C432	Capacitor,chip603 S_25	10 nF	21103
	Capacitor,chip603 S_12	Not used	
	Capacitor,chip603 S_SW	Not used	
	Capacitor,chip603 D_25	10 nF	21103
	Capacitor,chip603 D_12	Not used	
	Capacitor,chip603 D_SW	Not used	
	Capacitor,chip603 SB_25	10 nF	21103
	Capacitor,chip603 SB_12	Not used	
	Capacitor,chip603 SB_SW	Not used	
C433	Capacitor,chip603 S_25	Not used	

p. 19 of 31 PC. Board No. 776-8

Copyright © 2004

Partlist for Radioboard TRX3001B/TRDX3001B Date 20-08-2004
Drawing No. 0-3000-03-11 Unit No. 3004

Component	Description	Value	Niros No.
	Capacitor,chip603 S_12	10 nF	21103
	Capacitor,chip603 S_SW	Not used	
	Capacitor,chip603 D_25	Not used	
	Capacitor,chip603 D_12	10 nF	21103
	Capacitor,chip603 D_SW	Not used	
	Capacitor,chip603 SB_25	Not used	
	Capacitor,chip603 SB_12	10 nF	21103
	Capacitor,chip603 SB_SW	Not used	
C434	Capacitor,chip603	3,9 pF	21399
C435	Capacitor,chip603	10 nF	21103
C436	Capacitor,chip603	1 nF	21102
C437	Capacitor,chip603	100 pF	21101
C438	Capacitor,chip603	22 pF	21220
C439	Capacitor,chip603	22 pF	21220
C440	Capacitor,chip603	10 nF	21103
C441	Capacitor,chip603	10 nF	21103
C442	Capacitor,chip603	1 nF	21102
C443	Capacitor,chip603	10 nF	21103
C444	Capacitor,chip603	4,7 pF	21479
C445	Capacitor,chip603	10 pF	21100
C446	Capacitor,chip603	39 pF	21390
C447	Capacitor,chip603	Not used	
C448	Capacitor,chip603	Not used	
C449	Capacitor,chip603 S_25	Not used	
	Capacitor,chip603 S_12	Not used	
	Capacitor,chip603 S_SW	Not used	
	Capacitor,chip603 D_25	15 pF	21150
	Capacitor,chip603 D_12	15 pF	21150
	Capacitor,chip603 D_SW	15 pF	21150
	Capacitor,chip603 SB_25	Not used	
	Capacitor,chip603 SB_12	Not used	
	Capacitor,chip603 SB_SW	Not used	
C501	Capacitor,chip603	10 nF	21103
C502	Capacitor,chip603	10 nF	21103
C503	Capacitor,chip603	10 nF	21103
C504	Capacitor,chip603	10 nF	21103
C505	Capacitor,chip603	10 nF	21103
C506	Capacitot,lyt	330 uF/25V	26027
C507	Capacitor,chip603	10 nF	21103
C508	Capacitor,chip603	10 nF	21103
C509	Capacitor,chip1206	330 nF	20664
C510	Capacitor,ctan_a	6,8 uF/10V	25619
C511	Capacitor,chip805	100 nF	20654
C512	Capacitor,ctan_a	6,8 uF/10V	25619
C513	Capacitor,chip603	1 nF	21102
C514	Capacitor,ctan_a	6,8 uF/10V	25619

p. 20 of 31 PC. Board No. 776-8

Copyright © 2004

Partlist for Radioboard TRX3001B/TRDX3001B Date 20-08-2004
Drawing No. 0-3000-03-11 Unit No. 3004

Component	Description	Value	Niros No.
C515	Capacitor,chip603	10 nF	21103
C516	Capacitor,chip603	1 nF	21102
C517	Capacitor,chip603	1 nF	21102
C518	Capacitor,chip603 S_25	Not used	
	Capacitor,chip603 S_12	Not used	
	Capacitor,chip603 S_SW	47 nF	21473
	Capacitor,chip603 D_25	Not used	
	Capacitor,chip603 D_12	Not used	
	Capacitor,chip603 D_SW	47 nF	21473
	Capacitor,chip603 SB_25	Not used	
	Capacitor,chip603 SB_12	Not used	
	Capacitor,chip603 SB_SW	47 nF	21473
C519	Capacitor,chip603	47 nF	21473
C520	Capacitor,chip603 S_25	47 nF	21473
	Capacitor,chip603 S_12	47 nF	21473
	Capacitor,chip603 S_SW	Not used	
	Capacitor,chip603 D_25	47 nF	21473
	Capacitor,chip603 D_12	47 nF	21473
	Capacitor,chip603 D_SW	Not used	
	Capacitor,chip603 SB_25	47 nF	21473
	Capacitor,chip603 SB_12	47 nF	21473
	Capacitor,chip603 SB_SW	Not used	
C521	Capacitor,chip603 S_25	Not used	
	Capacitor,chip603 S_12	Not used	
	Capacitor,chip603 S_SW	47 nF	21473
	Capacitor,chip603 D_25	Not used	
	Capacitor,chip603 D_12	Not used	
	Capacitor,chip603 D_SW	47 nF	21473
	Capacitor,chip603 SB_25	Not used	
	Capacitor,chip603 SB_12	Not used	
	Capacitor,chip603 SB_SW	47 nF	21473
C522	Capacitor,chip603 S_25	Not used	
	Capacitor,chip603 S_12	Not used	
	Capacitor,chip603 S_SW	47 nF	21473
	Capacitor,chip603 D_25	Not used	
	Capacitor,chip603 D_12	Not used	
	Capacitor,chip603 D_SW	47 nF	21473
	Capacitor,chip603 SB_25	Not used	
	Capacitor,chip603 SB_12	Not used	
	Capacitor,chip603 SB_SW	47 nF	21473
C523	Capacitor,chip603 S_25	47 nF	21473
	Capacitor,chip603 S_12	47 nF	21473
	Capacitor,chip603 S_SW	Not used	
	Capacitor,chip603 D_25	47 nF	21473
	Capacitor,chip603 D_12	47 nF	21473
	Capacitor,chip603 D_SW	Not used	
	Capacitor,chip603 SB_25	47 nF	21473
	Capacitor,chip603 SB_12	47 nF	21473
	Capacitor,chip603 SB_SW	Not used	

p. 21 of 31 PC. Board No. 776-8

Copyright © 2004

Partlist for Radioboard TRX3001B/TRDX3001B Date 20-08-2004
Drawing No. 0-3000-03-11 Unit No. 3004

Component	Description		Value	Niros No.
C524	Capacitor,chip603		47 nF	21473
C525	Capacitor,chip603	S_25	Not used	
	Capacitor,chip603	S_12	Not used	
	Capacitor,chip603	S_SW	47 nF	21473
	Capacitor,chip603	D_25	Not used	
	Capacitor,chip603	D_12	Not used	
	Capacitor,chip603	D_SW	47 nF	21473
	Capacitor,chip603	SB_25	Not used	
	Capacitor,chip603	SB_12	Not used	
	Capacitor,chip603	SB_SW	47 nF	21473
C526	Capacitor,chip805		100 nF	20654
C527	Capacitor,chip805		100 nF	20654
C528	Capacitor,ctan_a		2,2 uF/16V	25613
C529	Capacitor,chip805		100 nF	20654
C530	Capacitor,chip805		100 nF	20654
C531	Capacitor,chip805		100 nF	20654
C532	Capacitor,chip603		10 nF	21103
C533	Capacitor,chip603		2,2 nF	21222
C534	Capacitor,chip603		1 nF	21102
C535	Capacitor,chip603		180 pF	21181
C536	Capacitor,chip603		180 pF	21181
C537	Capacitor,chip603		100 pF	21101
C538	Capacitor,chip603		10 nF	21103
C539	Capacitor,ctan_a		2,2 uF/16V	25613
C540	Capacitor,chip603		10 nF	21103
C541	Capacitor,chip603		10 nF	21103
C542	Capacitor,chip603		10 nF	21103
C543	Capacitor,chip603		10 nF	21103
C544	Capacitor,chip603		22 nF	21223
C545	Capacitor,chip603		10 nF	21103
C546	Capacitor,chip603		1 nF	21102
C547	Capacitor,chip603		1 nF	21102
F101	Filter		4N7	75906
F102	Filter		4N7	75906
F401-402	Crystal-filter	S_25	25KHZ	30023
	Crystal-filter	S_12	Not used	
	Crystal-filter	S_SW	25KHZ	30023
	Crystal-filter	D_25	25KHZ	30023
	Crystal-filter	D_12	Not used	
	Crystal-filter	D_SW	25KHZ	30023
	Crystal-filter	SB_25	25KHZ	30023
	Crystal-filter	SB_12	Not used	
	Crystal-filter	SB_SW	25KHZ	30023
F403-404	Crystal-filter	S_25	Not used	
	Crystal-filter	S_12	12.5KHZ	30024

p. 22 of 31 PC. Board No. 776-8

Copyright © 2004

Partlist for Radioboard TRX3001B/TRDX3001B Date 20-08-2004
Drawing No. 0-3000-03-11 Unit No. 3004

Component	Description		Value	Niros No.
	Crystal-filter	S_SW	12.5KHZ	30024
	Crystal-filter	D_25	Not used	
	Crystal-filter	D_12	12.5KHZ	30024
	Crystal-filter	D_SW	12.5KHZ	30024
	Crystal-filter	SB_25	Not used	
	Crystal-filter	SB_12	12.5KHZ	30024
	Crystal-filter	SB_SW	12.5KHZ	30024
F501	Filter		4N7	75906
F502	Filter		4N7	75906
F503	Filter		4N7	75906
F504	Ceramic-filter	S_25	CFWC450E	30066
	Ceramic-filter	S_12	CFWC450G	30067
	Ceramic-filter	S_SW	CFWC450E	30066
	Ceramic-filter	D_25	CFWC450E	30066
	Ceramic-filter	D_12	CFWC450G	30067
	Ceramic-filter	D_SW	CFWC450E	30066
	Ceramic-filter	SB_25	CFWC450E	30066
	Ceramic-filter	SB_12	CFWC450G	30067
	Ceramic-filter	SB_SW	CFWC450E	30066
F505	Ceramic-filter	S_25	Not used	
	Ceramic-filter	S_12	Not used	
	Ceramic-filter	S_SW	CFWC450G	30067
	Ceramic-filter	D_25	Not used	
	Ceramic-filter	D_12	Not used	
	Ceramic-filter	D_SW	CFWC450G	30067
	Ceramic-filter	SB_25	Not used	
	Ceramic-filter	SB_12	Not used	
	Ceramic-filter	SB_SW	CFWC450G	30067
F506	Filter		4N7	75906
F507	Filter		4N7	75906
X301	Vtcxo		Not used	
X302	Crystal		14.85 MHz	31204
T101	Transistor		BFS540	40206
T102	Transistor		BCW61D	40157
T103	Transistor		BCW61D	40157
T104	Transistor		BFG35	40207
T105	Transistor	S_25	BCW61D	40157
	Transistor	S_12	BCW61D	40157
	Transistor	S_SW	BCW61D	40157
	Transistor	D_25	Not used	
	Transistor	D_12	Not used	
	Transistor	D_SW	Not used	
	Transistor	SB_25	BCW61D	40157
	Transistor	SB_12	BCW61D	40157
	Transistor	SB_SW	BCW61D	40157

p. 23 of 31 PC. Board No. 776-8

Copyright © 2004

Partlist for Radioboard TRX3001B/TRDX3001B Date 20-08-2004
Drawing No. 0-3000-03-11 Unit No. 3004

Component	Description		Value	Niros No.
T106	Transistor		BCW60D	40156
T108	Transistor		SI4953DY	40202
T110	Transistor	S_25	DTA144EUA	40208
	Transistor	S_12	DTA144EUA	40208
	Transistor	S_SW	DTA144EUA	40208
	Transistor	D_25	Not used	
	Transistor	D_12	Not used	
	Transistor	D_SW	Not used	
	Transistor	SB_25	DTA144EUA	40208
	Transistor	SB_12	DTA144EUA	40208
	Transistor	SB_SW	DTA144EUA	40208
T111	Transistor	S_25	DTC144EUA	40209
	Transistor	S_12	DTC144EUA	40209
	Transistor	S_SW	DTC144EUA	40209
	Transistor	D_25	Not used	
	Transistor	D_12	Not used	
	Transistor	D_SW	Not used	
	Transistor	SB_25	DTC144EUA	40209
	Transistor	SB_12	DTC144EUA	40209
	Transistor	SB_SW	DTC144EUA	40209
T201	Transistor		SST310	40175
T202	Transistor		BFR92A	40150
T204	Transistor		BFS540	40206
T205	Transistor		DTA123JUA	40210
T206	Transistor		DTC144EUA	40209
T207	Transistor		BFR92A	40150
T208	Transistor		Not used	
T209	Transistor		BCW61D	40157
T210	Transistor		DTC144EUA	40209
T211	Transistor		BCW60D	40156
T301	Transistor		BCW61D	40157
T302	Transistor		DTC144EUA	40209
T303	Transistor		BFR92A	40150
T304	Transistor		BFR92A	40150
T305	Transistor		BFR92A	40150
T306	Transistor		SST310	40175
T401	Transistor		BFR505	40205
T402	Transistor	S_25	Not used	
	Transistor	S_12	Not used	
	Transistor	S_SW	DTC144EUA	40209
	Transistor	D_25	Not used	
	Transistor	D_12	Not used	
	Transistor	D_SW	DTC144EUA	40209
	Transistor	SB_25	Not used	
	Transistor	SB_12	Not used	
	Transistor	SB_SW	DTC144EUA	40209
T403	Transistor	S_25	Not used	

p. 24 of 31 PC. Board No. 776-8

Copyright © 2004

Partlist for Radioboard TRX3001B/TRDX3001B Date 20-08-2004
Drawing No. 0-3000-03-11 Unit No. 3004

Component	Description		Value	Niros No.
	Transistor	S_12	Not used	
	Transistor	S_SW	DTC144EUA	40209
	Transistor	D_25	Not used	
	Transistor	D_12	Not used	
	Transistor	D_SW	DTC144EUA	40209
	Transistor	SB_25	Not used	
	Transistor	SB_12	Not used	
	Transistor	SB_SW	DTC144EUA	40209
T404	Transistor	S_25	Not used	
	Transistor	S_12	Not used	
	Transistor	S_SW	DTC114YUA	40211
	Transistor	D_25	Not used	
	Transistor	D_12	Not used	
	Transistor	D_SW	DTC114YUA	40211
	Transistor	SB_25	Not used	
	Transistor	SB_12	Not used	
	Transistor	SB_SW	DTC114YUA	40211
T405	Transistor		SST310	40175
T406	Transistor		BFS540	40206
T501	Transistor		FCX720	40201
T502	Transistor		DTC114YUA	40211
T503	Transistor		DTC144EUA	40209
T504	Transistor		BF990A	40187
T505	Transistor		BFR92A	40150
T506	Transistor		DTA123JUA	40210
T507	Transistor		DTC144EUA	40209
T508	Transistor		BCW61D	40157
T509	Transistor	S_25	Not used	
	Transistor	S_12	Not used	
	Transistor	S_SW	DTA144EUA	40208
	Transistor	D_25	Not used	
	Transistor	D_12	Not used	
	Transistor	D_SW	DTA144EUA	40208
	Transistor	SB_25	Not used	
	Transistor	SB_12	Not used	
	Transistor	SB_SW	DTA144EUA	40208
D101	Diode	S_25	MA4P1250	45171
	Diode	S_12	MA4P1250	45171
	Diode	S_SW	MA4P1250	45171
	Resistor,chip1206	D_25	0 Ohm	12000
	Resistor,chip1206	D_12	0 Ohm	12000
	Resistor,chip1206	D_SW	0 Ohm	12000
	Diode	SB_25	MA4P1250	45171
	Diode	SB_12	MA4P1250	45171
	Diode	SB_SW	MA4P1250	45171
D102	Diode	S_25	MA4P1250	45171

p. 25 of 31 PC. Board No. 776-8

Copyright © 2004

Partlist for Radioboard TRX3001B/TRDX3001B Date 20-08-2004
Drawing No. 0-3000-03-11 Unit No. 3004

Component	Description		Value	Niros No.
	Diode	S_12	MA4P1250	45171
	Diode	S_SW	MA4P1250	45171
	Diode	D_25	Not used	
	Diode	D_12	Not used	
	Diode	D_SW	Not used	
	Diode	SB_25	MA4P1250	45171
	Diode	SB_12	MA4P1250	45171
	Diode	SB_SW	MA4P1250	45171
D103	Diode	S_25	BA682	45152
	Diode	S_12	BA682	45152
	Diode	S_SW	BA682	45152
	Diode	D_25	Not used	
	Diode	D_12	Not used	
	Diode	D_SW	Not used	
	Diode	SB_25	BA682	45152
	Diode	SB_12	BA682	45152
	Diode	SB_SW	BA682	45152
D104	Diode		BAS70-04	45197
D105	Diode,zener		BZX84C5V6	41241
D201	Diode,kap		BB134	45196
D202	Diode,kap		BB132	45194
D203	Diode		BAT17-04	45172
D301	Diode		Not used	
D302	Diode,kap		Not used	
D303	Diode,kap		BB133	45195
D304	Diode		BAT17-04	45172
D305	Diode,kap		BB133	45195
D306	Diode		BAT54S	45173
D307	Diode	S_25	BAT54S	45173
	Diode	S_12	BAT54S	45173
	Diode	S_SW	BAT54S	45173
	Diode	D_25	Not used	
	Diode	D_12	Not used	
	Diode	D_SW	Not used	
	Diode	SB_25	BAT54S	45173
	Diode	SB_12	BAT54S	45173
	Diode	SB_SW	BAT54S	45173
D401	Diode,kap		BB133	45195
D402	Diode,kap		BB133	45195
D403	Diode,kap		BB133	45195
D404	Diode,kap		BB133	45195
D405	Diode	S_25	Not used	
	Diode	S_12	Not used	
	Diode	S_SW	BA682	45152
	Diode	D_25	Not used	
	Diode	D_12	Not used	
	Diode	D_SW	BA682	45152
	Diode	SB_25	Not used	

p. 26 of 31 PC. Board No. 776-8

Copyright © 2004

Partlist for Radioboard TRX3001B/TRDX3001B Date 20-08-2004
Drawing No. 0-3000-03-11 Unit No. 3004

Component	Description	Value	Niros No.
	Diode SB_12	Not used	
	Diode SB_SW	Not used	
D406	Diode S_25	Not used	
	Diode S_12	Not used	
	Diode S_SW	BA682	45152
	Diode D_25	Not used	
	Diode D_12	Not used	
	Diode D_SW	BA682	45152
	Diode SB_25	Not used	
	Diode SB_12	Not used	
	Diode SB_SW	BA682	45152
D407	Diode S_25	Not used	
	Diode S_12	Not used	
	Diode S_SW	BA682	45152
	Diode D_25	Not used	
	Diode D_12	Not used	
	Diode D_SW	BA682	45152
	Diode SB_25	Not used	
	Diode SB_12	Not used	
	Diode SB_SW	BA682	45152
D408	Diode S_25	Not used	
	Diode S_12	Not used	
	Diode S_SW	BA682	45152
	Diode D_25	Not used	
	Diode D_12	Not used	
	Diode D_SW	BA682	45152
	Diode SB_25	Not used	
	Diode SB_12	Not used	
	Diode SB_SW	BA682	45152
D409	Diode S_25	Not used	
	Diode S_12	Not used	
	Diode S_SW	BA682	45152
	Diode D_25	Not used	
	Diode D_12	Not used	
	Diode D_SW	BA682	45152
	Diode SB_25	Not used	
	Diode SB_12	Not used	
	Diode SB_SW	BA682	45152
D410	Diode	HSMS-2827	45201
D501	Diode,transient	SMCJ16A	41249
D502	Diode	BYD17D	45176
D503	Diode S_25	Not used	
	Diode S_12	Not used	
	Diode S_SW	BA682	45152
	Diode D_25	Not used	
	Diode D_12	Not used	
	Diode D_SW	BA682	45152
	Diode SB_25	Not used	
	Diode SB_12	Not used	

p. 27 of 31 PC. Board No. 776-8

Copyright © 2004

Partlist for Radioboard TRX3001B/TRDX3001B Date 20-08-2004
Drawing No. 0-3000-03-11 Unit No. 3004

Component	Description		Value	Niros No.
	Diode	SB_SW	BA682	45152
D504	Diode	S_25	Not used	
	Diode	S_12	Not used	
	Diode	S_SW	BA682	45152
	Diode	D_25	Not used	
	Diode	D_12	Not used	
	Diode	D_SW	BA682	45152
	Diode	SB_25	Not used	
	Diode	SB_12	Not used	
	Diode	SB_SW	BA682	45152
D505	Diode	S_25	Not used	
	Diode	S_12	Not used	
	Diode	S_SW	BA682	45152
	Diode	D_25	Not used	
	Diode	D_12	Not used	
	Diode	D_SW	BA682	45152
	Diode	SB_25	Not used	
	Diode	SB_12	Not used	
	Diode	SB_SW	BA682	45152
D506	Diode	S_25	Not used	
	Diode	S_12	Not used	
	Diode	S_SW	BA682	45152
	Diode	D_25	Not used	
	Diode	D_12	Not used	
	Diode	D_SW	BA682	45152
	Diode	SB_25	Not used	
	Diode	SB_12	Not used	
	Diode	SB_SW	BA682	45152
D507	Diode		BAV99	45148
IC101	Integrated_circuit		RA30H0608M	46624
IC102	Integrated_circuit		TDA2003V	46538
IC103	Integrated_circuit		MIC29152BT	46539
IC201	Integrated_circuit		PIC16CE624	46621
IC202	Integrated_circuit	S_25	Not used	
	Integrated_circuit	S_12	Not used	
	Integrated_circuit	S_SW	TC4S66F	46250
	Integrated_circuit	D_25	Not used	
	Integrated_circuit	D_12	Not used	
	Integrated_circuit	D_SW	TC4S66F	46250
	Integrated_circuit	SB_25	Not used	
	Integrated_circuit	SB_12	Not used	
	Integrated_circuit	SB_SW	TC4S66F	46250
IC203	Integrated_circuit		AD822AR	46552
IC204	Integrated_circuit		Not used	
IC205	Integrated_circuit		Not used	
IC206	Integrated_circuit		LMX2306TM	46547
IC207	Integrated_circuit		TC4S66F	46250

p. 28 of 31 PC. Board No. 776-8

Copyright © 2004

Partlist for Radioboard TRX3001B/TRDX3001B Date 20-08-2004
Drawing No. 0-3000-03-11 Unit No. 3004

Component	Description	Value	Niros No.
IC301	Integrated_circuit	LMX2306TM	46547
IC302	Integrated_circuit	Not used	
IC303	Integrated_circuit	40106BT	46116
IC501	Integrated_circuit	LM317D	46525
IC502	Integrated_circuit	MC3371D	46247
IC503	Integrated_circuit	LPC662	46244
TR401	Trafo	75946	75946
TR402	Trafo	75946	75946
L101	Coil,chip	75877	75877
L102	Coil,chip	75877	75877
L103	Coil,chip1206	75938	75938
L104	Coil,chip1806	75941	75941
L105	Coil S_25	75883	75883
	Coil S_12	75883	75883
	Coil S_SW	75883	75883
	Coil,chip D_25	Not used	
	Coil,chip D_12	Not used	
	Coil,chip D_SW	Not used	
	Coil SB_25	75883	75883
	Coil SB_12	75883	75883
	Coil SB_SW	75883	75883
L106	Coil,chip	75883	75883
L107	Coil	75943	75943
L108	Coil	75943	75943
L109	Coil	75942	75942
L110	Coil,chip1206	75938	75938
L111	Coil,chip1206	75938	75938
L201	Coil,chip	75842	75842
L202	Coil	75947	75947
L203	Coil	75883	75883
L204	Coil,chip	75948	75948
L205	Coil,chip	75883	75883
L206	Coil,chip	75883	75883
L301	Coil_chip	76008	76008
L302	Coil	75883	75883
L303	Coil,chip	75948	75948
L304	Coil	75923	75923
L305	Coil,chip	75842	75842
L307	Coil,chip	75883	75883
L401	Coil	75945	75945
L402	Coil	75944	75944
L403	Coil	75945	75945
L404	Coil	75944	75944

p. 29 of 31 PC. Board No. 776-8

Copyright © 2004

Partlist for Radioboard TRX3001B/TRDX3001B Date 20-08-2004
Drawing No. 0-3000-03-11 Unit No. 3004

Component	Description		Value	Niros No.
L405	Coil,chip		75879	75879
L406	Coil		75945	75945
L407	Coil		75944	75944
L408	Coil		75945	75945
L409	Coil		75944	75944
L410	Coil_chip		76008	76008
L411	Coil,chip		75879	75879
L412	Coil,chip		75948	75948
L413	Coil,chip805	S_25	Not used	
	Coil,chip805	S_12	Not used	
	Coil,chip805	S_SW	Not used	
	Coil,chip805	D_25	75966	75966
	Coil,chip805	D_12	75966	75966
	Coil,chip805	D_SW	75966	75966
	Coil,chip805	S_25	Not used	
	Coil,chip805	S_12	Not used	
	Coil,chip805	S_SW	Not used	
L501	Coil,chip		75883	75883
L502	Coil,chip		75883	75883
L503	Coil,chip1206		75938	75938
L504	Coil,chip1206		75938	75938
L505	Coil		75901	75901
L506	Coil,chip		75883	75883
FUSE1	Fuse		Not used	
FUSE2	Fuse		Not used	
FUSE3	Fuse		12A	83374
J1	Antenna_connector			83365
J2	Connector_25pol			83366
J3	Conector_2x3pin			83363
V1	Resistor,chip1206	S_25	100 Ohm	12101
	Resistor,chip1206	S_12	220 Ohm	12221
	Resistor,chip1206	S_SW	470 Ohm	12471
	Resistor,chip1206	D_25	100 Kohm	12104
	Resistor,chip1206	D_12	220 Kohm	12224
	Resistor,chip1206	D_SW	470 Kohm	12474
	Resistor,chip1206	SB_25	680 Ohm	12681
	Resistor,chip1206	SB_12	6,8 Kohm	12682
	Resistor,chip1206	SB_SW	68 Kohm	12683
V2	Resistor,chip1206	S_25	100 Ohm	12101
	Resistor,chip1206	S_12	220 Ohm	12221
	Resistor,chip1206	S_SW	470 Ohm	12471
	Resistor,chip1206	D_25	100 Kohm	12104
	Resistor,chip1206	D_12	220 Kohm	12224

p. 30 of 31 PC. Board No. 776-8

Copyright © 2004

Partlist for Radioboard TRX3001B/TRDX3001B Date 20-08-2004
Drawing No. 0-3000-03-11 Unit No. 3004

Component	Description	Value	Niros No.
	Resistor,chip1206 D_SW	470 Kohm	12474
	Resistor,chip1206 SB_25	680 Ohm	12681
	Resistor,chip1206 SB_12	6,8 Kohm	12682
	Resistor,chip1206 SB_SW	68 Kohm	12683
	Rx_coaxcable S_25	0 pcs	
	Rx_coaxcable S_12	0 pcs	
	Rx_coaxcable S_SW	0 pcs	
	Rx_coaxcable D_25	1 pcs	83397
	Rx_coaxcable D_12	1 pcs	83397
	Rx_coaxcable D_SW	1 pcs	83397
	Rx_coaxcable SB_25	0 pcs	
	Rx_coaxcable SB_12	0 pcs	
	Rx_coaxcable SB_SW	0 pcs	
	Lpf_shield S_25	0 pcs	
	Lpf_shield S_12	0 pcs	
	Lpf_shield S_SW	0 pcs	
	Lpf_shield D_25	1 pcs	98204
	Lpf_shield D_12	1 pcs	98204
	Lpf_shield D_SW	1 pcs	98204
	Lpf_shield SB_25	1 pcs	98204
	Lpf_shield SB_12	1 pcs	98204
	Lpf_shield SB_SW	1 pcs	98204
	Lpf_shield_lid S_25	0 pcs	
	Lpf_shield_lid S_12	0 pcs	
	Lpf_shield_lid S_SW	0 pcs	
	Lpf_shield_lid D_25	1 pcs	98205
	Lpf_shield_lid D_12	1 pcs	98205
	Lpf_shield_lid D_SW	1 pcs	98205
	Lpf_shield_lid SB_25	1 pcs	98205
	Lpf_shield_lid SB_12	1 pcs	98205
	Lpf_shield_lid SB_SW	1 pcs	98205
	Pc_board_no. 776-8	1 pcs	95776
	Vco_shield	2 pcs	98162
	Vco_lid S_25	1 pcs	98163
	Vco_lid S_12	1 pcs	98163
	Vco_lid S_SW	1 pcs	98163
	Vco_lid D_25	2 pcs	98163
	Vco_lid D_12	2 pcs	98163
	Vco_lid D_SW	2 pcs	98163
	Vco_lid SB_25	2 pcs	98163
	Vco_lid SB_12	2 pcs	98163
	Vco_lid SB_SW	2 pcs	98163
	Rx_front-shield	1 pcs	98206
	Rx_front-shield_lid	1 pcs	98207

p. 31 of 31 PC. Board No. 776-8

Copyright © 2004

11. Radioboard TRX3001C

Copyright © 2004

11.1 Diagram

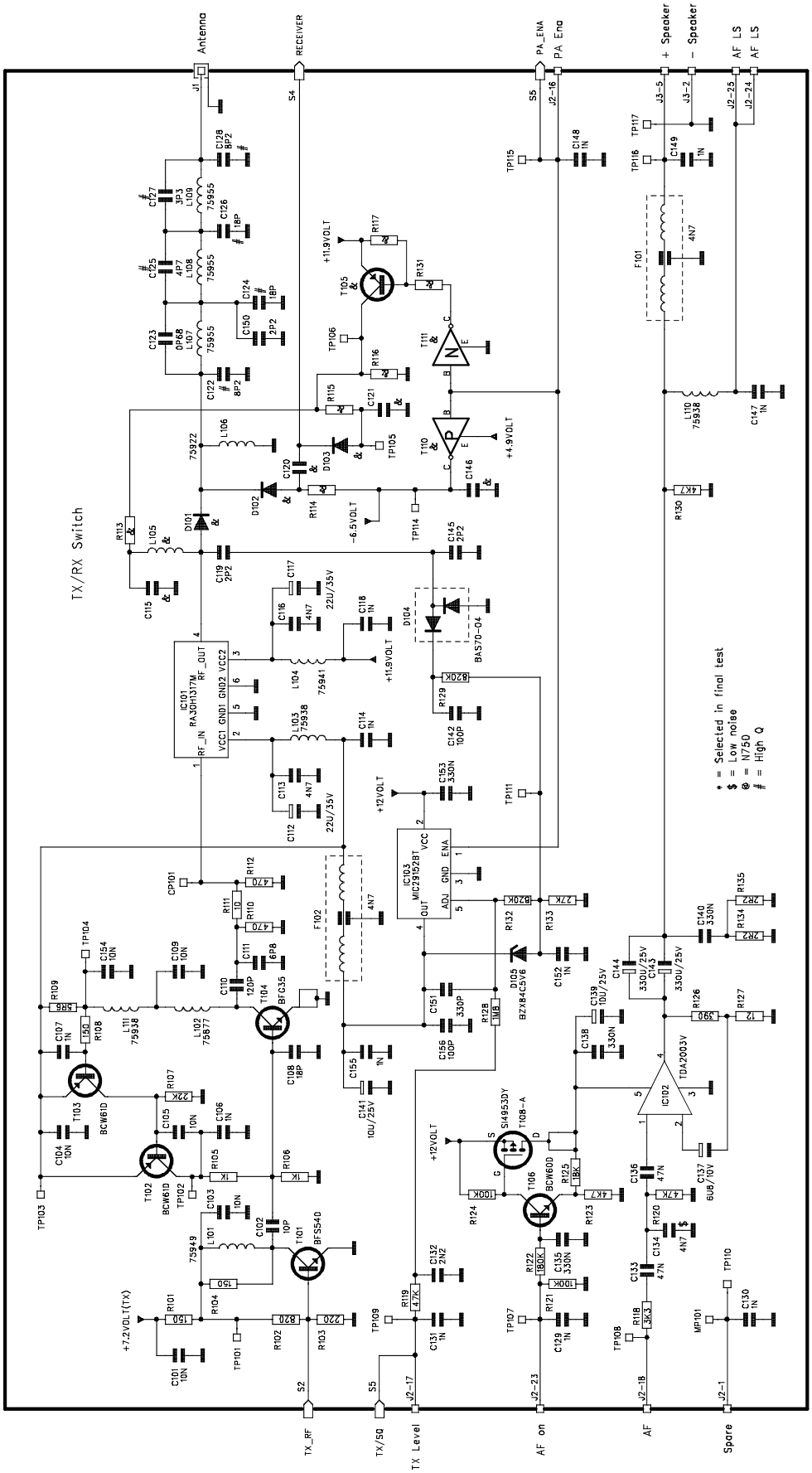

&	Simplex	Duplex	SimplexBase
R113	270	Not used	270
R114	2K7	Not used	2K7
R115	2K2	Not used	2K2
R116	10K	Not used	10K
R117	10K	Not used	10K
R131	10K	Not used	10K
C115	1n	Not used	1n
C120	1n	Not used	1n
C121	1n	Not used	1n
C146	1n	Not used	1n
T105	BCW61D	Not used	BCW61D
T110	DTA144EUA	Not used	DTA144EUA
T111	DTC144EUA	Not used	DTC144EUA
D101	MA4P1250	0 Ohm	MA4P1250
D102	MA4P1250	Not used	MA4P1250
D103	BA682	Not used	BA682
L105	75922	Not used	75922

	SIMPLEX	DUPLEX	SIMPLEX BASE
25KHz	Unit No.: 3002	Unit No.: 3202	Unit No.: 3302
12,5KHz	Unit No.: 3003	Unit No.: 3203	Unit No.: 3303
SW	Unit No.: 3012	Unit No.: 3212	Unit No.: 3312

SUBJECT TO CHANGE WITHOUT NOTICE

Date: 18-03-2003 Sign: HEK	6	NIROS TELECOMMUNICATION A/S Hirsemarken 5, 3520 Farum	Radioboard TRX3001C/TRDX3001C
Date: 04-08-2003 Sign: HEK	7		
Drawing No.: 0-3006-03-7 p 1 of 5		PC. Board No.: 776-8	

Copyright © 2004

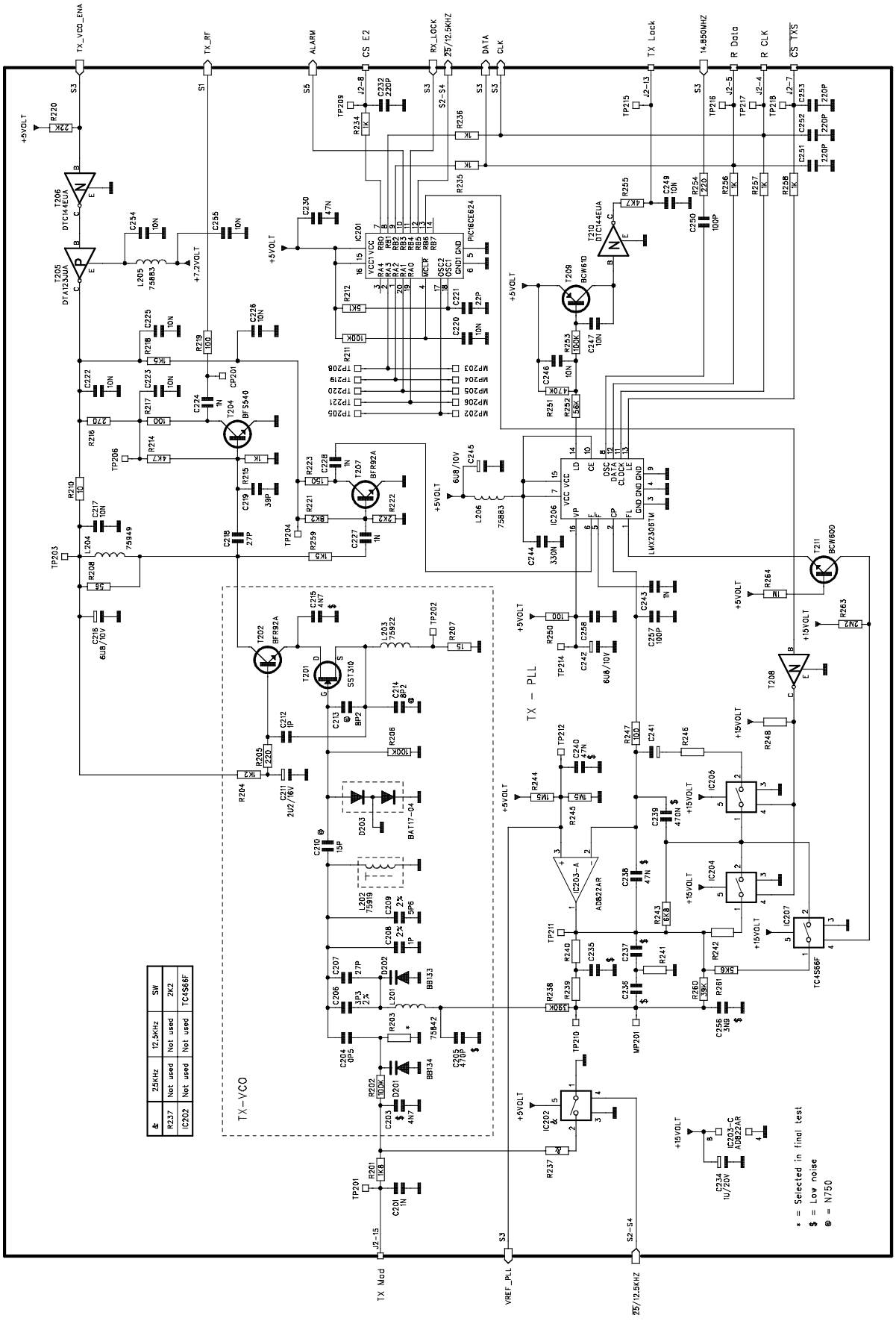

	25KHz	12.5KHz	SW
R237	Not used	Not used	2K2
IC202	Not used	Not used	TC4S66F

	SIMPLEX	DUPLEX	SIMPLEX BASE
25KHz	Unit No.: 3002	Unit No.: 3202	Unit No.: 3302
12,5KHz	Unit No.: 3003	Unit No.: 3203	Unit No.: 3303
SW	Unit No.: 3012	Unit No.: 3212	Unit No.: 3312

SUBJECT TO CHANGE WITHOUT NOTICE

Date: 18-03-2003 Sign: HEK	6	NIROS TELECOMMUNICATION A/S Hirsemarken 5, 3520 Farum	Radioboard TRX3001C/TRDX3001C
Date: 04-08-2003 Sign: HEK	7		
Drawing No.: 0-3006-03-7 p 2 of 5		PC. Board No.: 776-8	

Copyright © 2004

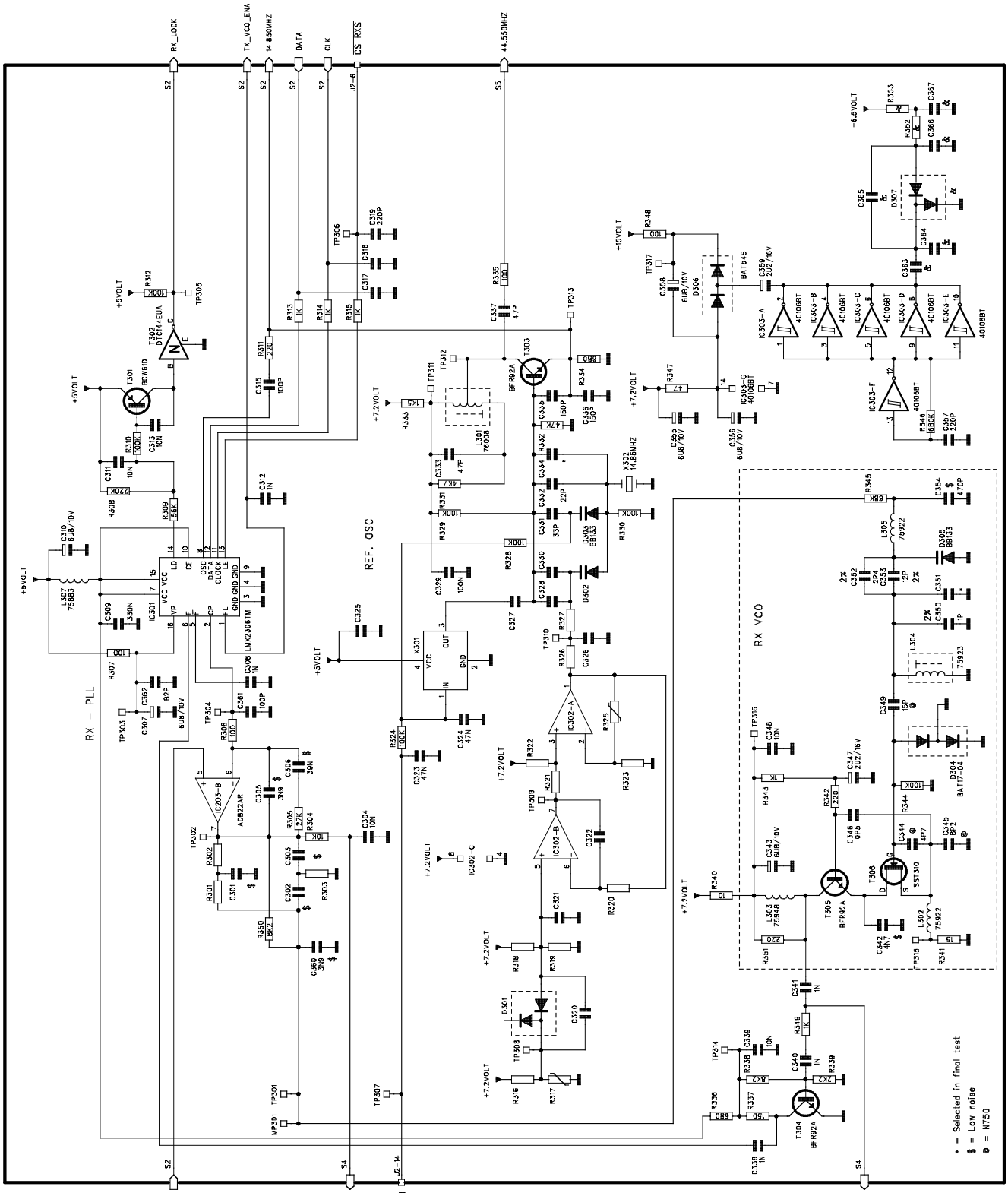

&	Simplex	Duplex	SimplexBase
R352	10K	Not used	10K
R353	47K	Not used	47K
C363	330n	Not used	330n
C364	22p	Not used	22p
C365	22p	Not used	22p
C366	330n	Not used	330n
C367	330n	Not used	330n
D307	BAT54S	Not used	BAT54S

SUBJECT TO CHANGE WITHOUT NOTICE

	SIMPLEX	DUPLEX	SIMPLEX BASE
25KHz	Unit No.: 3002	Unit No.: 3202	Unit No.: 3302
12,5KHz	Unit No.: 3003	Unit No.: 3203	Unit No.: 3303
SW	Unit No.: 3012	Unit No.: 3212	Unit No.: 3312

Date: 18-03-2003 Sign: HEK	6	NIROS TELECOMMUNICATION A/S Hirsemarken 5, 3520 Farum	Radioboard TRX3001C/TRDX3001C
Date: 04-08-2003 Sign: HEK	7		
Drawing No.: 0-3006-03-7 p 3 of 5		PC. Board No.: 776-B	

Copyright © 2004

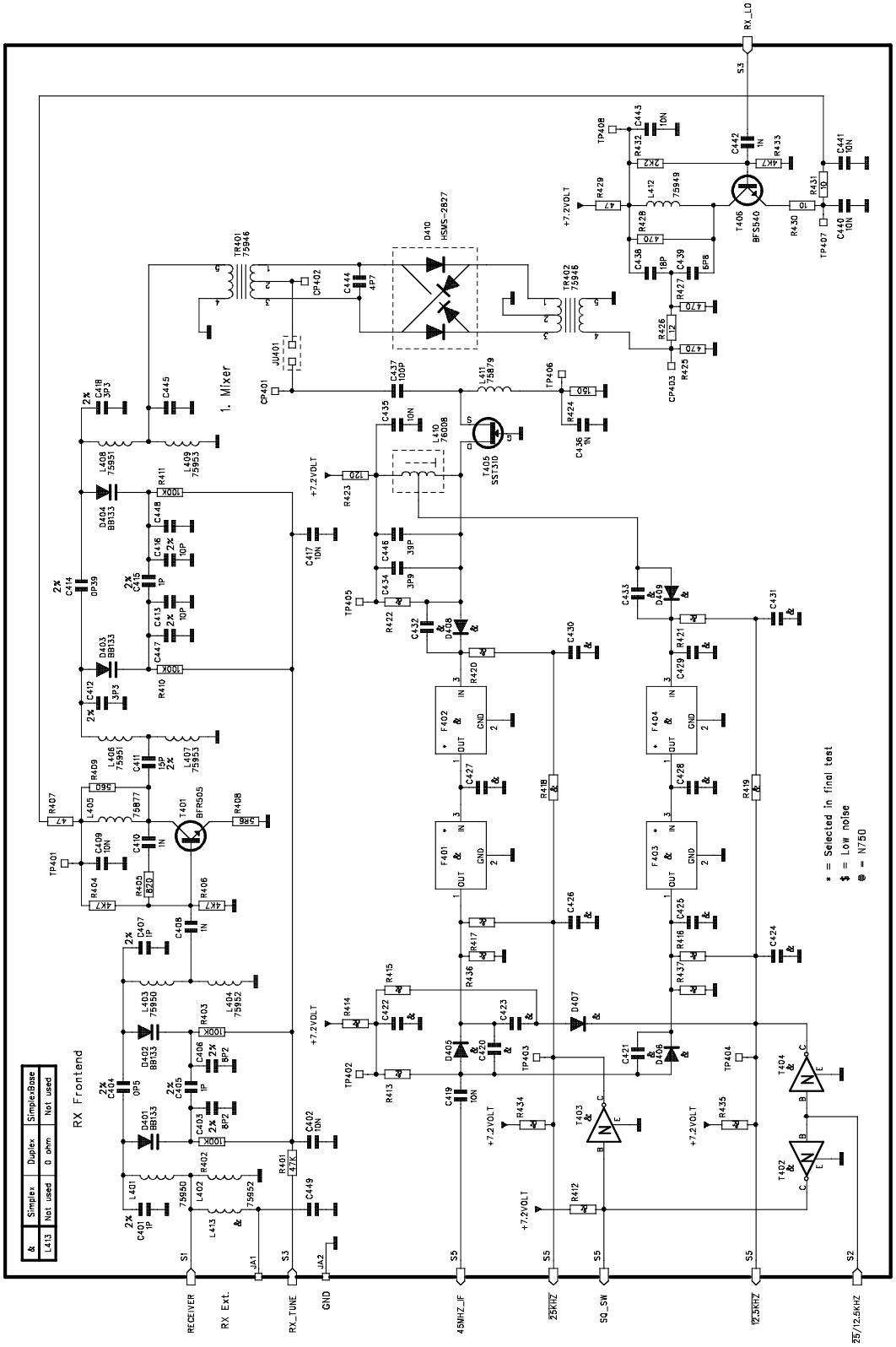

&	25KHz	12,5KHz	SW
R412	Not used	Not used	6K8
R413	Not used	Not used	2K2
R414	Not used	Not used	470
R415	Not used	Not used	4K7
R416	Not used	Not used	390
R417	Not used	Not used	1K8
R418	Not used	Not used	330
R419	Not used	Not used	1K5
R420	Not used	Not used	1K8
R421	Not used	Not used	680
R422	1K	1K5	10K
R434	Not used	Not used	100K
R435	Not used	Not used	100K
R436	B20	Not used	Not used
R437	Not used	330	Not used
C420	10n	Not used	Not used
C421	Not used	10n	Not used
C422	Not used	Not used	10n
C423	Not used	Not used	10n
C424	Not used	Not used	10n
C425	Not used	6p8	6p8
C426	Not used	Not used	10n
C427	8p2	Not used	8p2
C428	Not used	18p	18p
C429	Not used	6p8	6p8
C430	Not used	Not used	10n
C431	Not used	Not used	10n
C432	10n	Not used	Not used
C433	Not used	10n	Not used
F401-402	25KHz	Not used	25KHz
F403-404	Not used	12,5KHz	12,5KHz
T402	Not used	Not used	DTC144EUA
T403	Not used	Not used	DTC144EUA
T404	Not used	Not used	DTC114YUA
D405	Not used	Not used	BA682
D406	Not used	Not used	BA682
D407	Not used	Not used	BA682
D408	Not used	Not used	BA682
D409	Not used	Not used	BA682

&	Simplex	Duplex	SimplexBase
L413	Not used	0 ohm	Not used

	SIMPLEX	DUPLEX	SIMPLEX BASE
25KHz	Unit No.: 3002	Unit No.: 3202	Unit No.: 3302
12,5KHz	Unit No.: 3003	Unit No.: 3203	Unit No.: 3303
SW	Unit No.: 3012	Unit No.: 3212	Unit No.: 3312

SUBJECT TO CHANGE WITHOUT NOTICE

Date: 18-03-2003 Sign: HEK	6	NIROS TELECOMMUNICATION A/S Hirsemarken 5, 3520 Farum	Radioboard TRX3001C/TRDX3001C
Date: 04-08-2003 Sign: HEK	7		
Drawing No.: 0-3006-03-7 p 4 of 5		PC. Board No.: 776-8	

Copyright © 2004

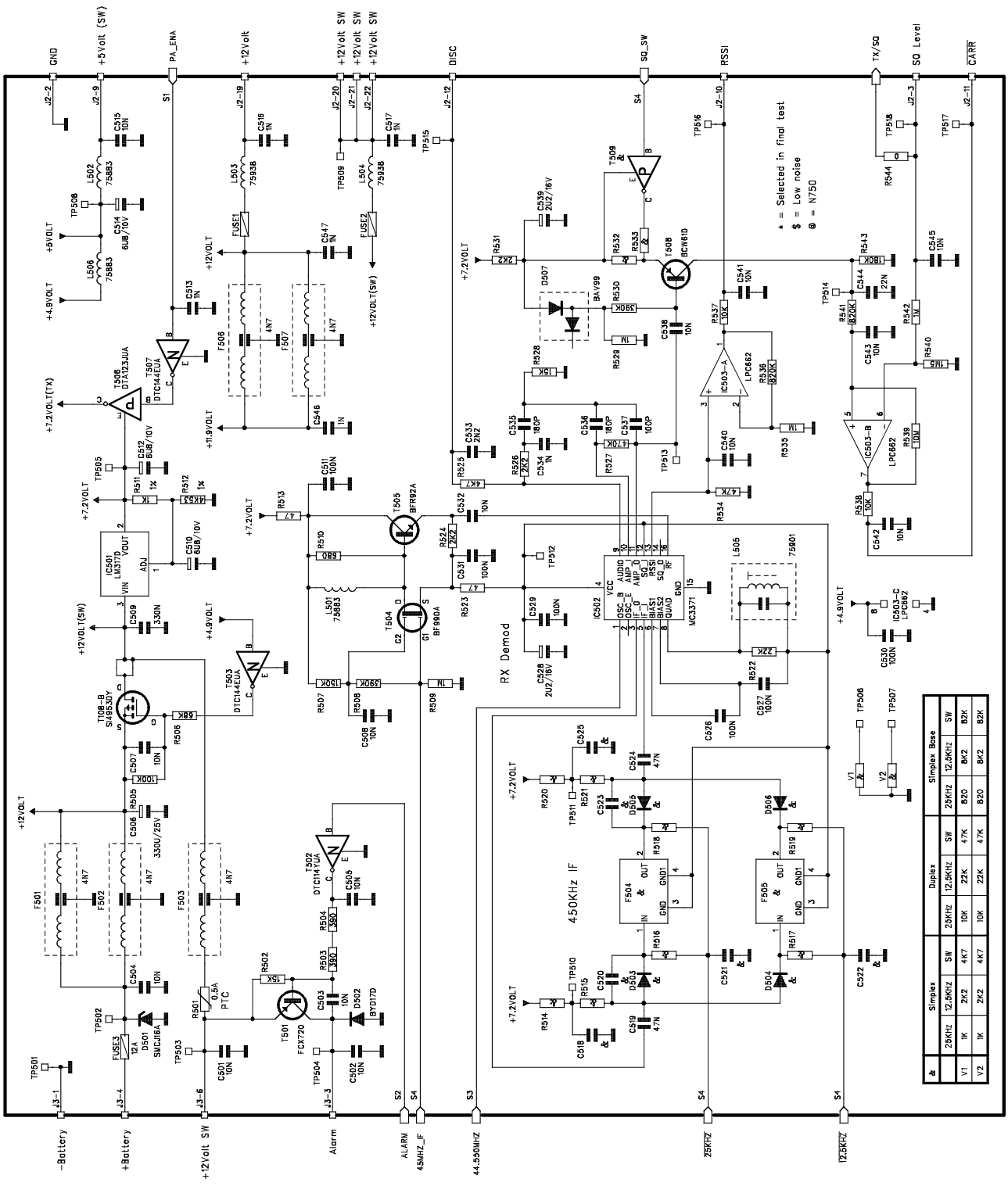

&	25KHz	12,5KHz	SW
V1	1K	2K2	4K7
V2	1K	2K2	4K7

&	Duplex		
	25KHz	12,5KHz	SW
V1	10K	22K	4K7
V2	10K	22K	4K7

&	Simplex Base		
	25KHz	12,5KHz	SW
V1	B2O	BK2	B2K
V2	B2O	BK2	B2K

&	25KHz	12,5KHz	SW
R514	Not used	Not used	470
R515	Not used	Not used	6K8
R516	Not used	Not used	6K8
R517	Not used	Not used	6K8
R518	Not used	Not used	6K8
R519	Not used	Not used	470
R520	Not used	Not used	470
R521	Not used	Not used	6K8
R532	6K8	3K3	6K8
R533	Not used	Not used	6K8
C518	Not used	Not used	47n
C520	47n	47n	Not used
C521	Not used	Not used	47n
C522	Not used	Not used	47n
C523	47n	47n	Not used
C525	Not used	Not used	47n
F504	CFWC450E	CFWC450G	CFWC450E
F505	Not used	Not used	CFWC450G
T509	Not used	Not used	DTA144EUA
D503	Not used	Not used	BA682
D504	Not used	Not used	BA682
D505	Not used	Not used	BA682
D506	Not used	Not used	BA682

SUBJECT TO CHANGE WITHOUT NOTICE

	SIMPLEX	DUPLEX	SIMPLEX BASE
25KHz	Unit No.: 3002	Unit No.: 3202	Unit No.: 3302
12,5KHz	Unit No.: 3003	Unit No.: 3203	Unit No.: 3303
SW	Unit No.: 3012	Unit No.: 3212	Unit No.: 3312

Date: 18-03-2003 Sign: HEK	6	NIROS TELECOMMUNICATION A/S Hirsemarken 5, 3520 Farum
Date: 04-08-2003 Sign: HEK	7	
Drawing No.: 0-3006-03-7 p 5 of 5		PC. Board No.: 776-8

Radioboard TRX3001C/TRDX3001C

File/Reference	Prepared	Date	Revised by	Revised date	Revision No.	Approved
Manual for TRX3001	TN	08-03-06	TN	04-08-2003	7	PA

Copyright © 2004

11.2 Componentside

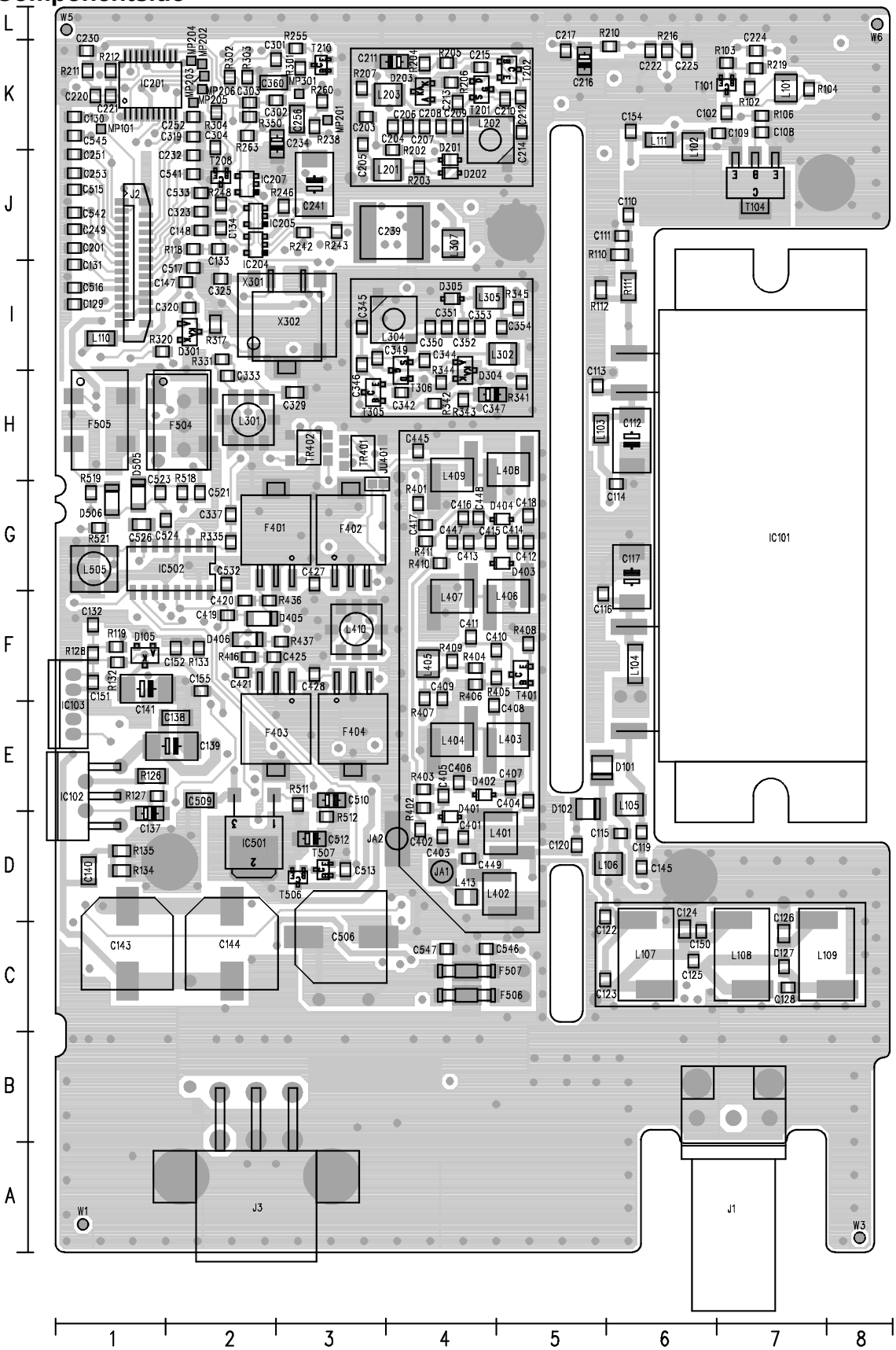

Componentside 776-8

SUBJECT TO CHANGE WITHOUT NOTICE

	SIMPLEX	DUPLEX	SIMPLEX BASE
25KHz	Unit No.: 3002	Unit No.: 3202	Unit No.: 3302
12,5KHz	Unit No.: 3003	Unit No.: 3203	Unit No.: 3303
SW	Unit No.: 3012	Unit No.: 3212	Unit No.: 3312

Date: 18-03-2003 Sign: HEK	6	NIROS TELECOMMUNICATION A/S Hirsemarken 5, 3520 Farum	Radioboard TRX3001C/TRDX3001C
Date: 04-08-2003 Sign: HEK	7		
Drawing No.: 0-3006-04-7		PC. Board No.: 776-8	

Copyright © 2004

11.3 Wiringside

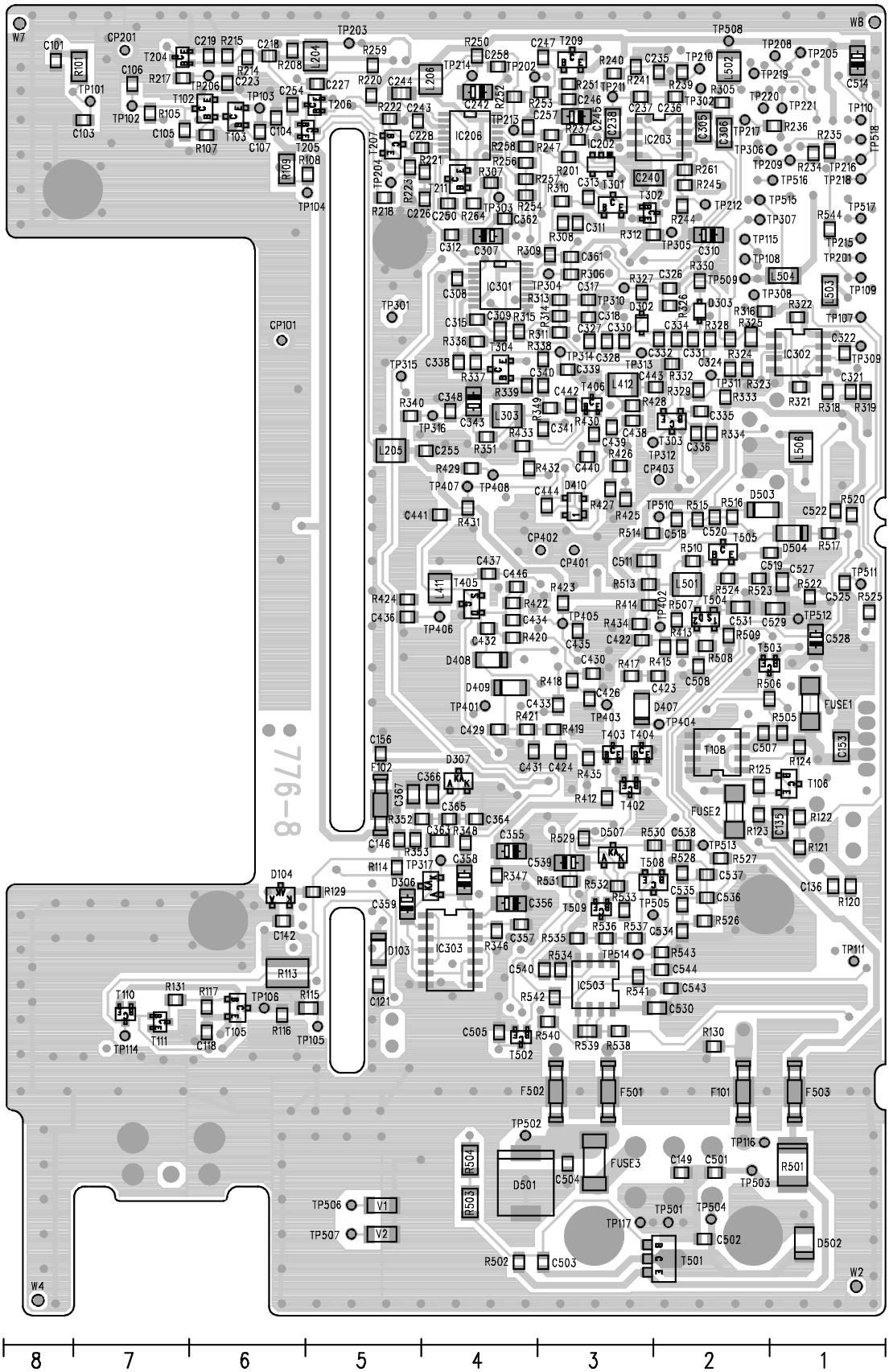

Wiringside 776-8

SUBJECT TO CHANGE WITHOUT NOTICE

	SIMPLEX	DUPLEX	SIMPLEX BASE
25KHz	Unit No.: 3002	Unit No.: 3202	Unit No.: 3302
12,5KHz	Unit No.: 3003	Unit No.: 3203	Unit No.: 3303
SW	Unit No.: 3012	Unit No.: 3212	Unit No.: 3312

Date: 18-03-2003 Sign: HEK	6	NIROS TELECOMMUNICATION A/S Hirsemarken 5, 3520 Farum	Radioboard TRX3001C/TRDX3001C
Date: 04-08-2003 Sign: HEK	7		
Drawing No.: 0-3006-04-7		PC. Board No.: 776-8	

Copyright © 2004

11.4 Fieldlist

Name Radioboard TRX3001C/TRDX3001C — Date 4-8-03
Drawing No. 0-3006-03-7 — Unit No. 3002

Component	Type	Side	Cord	Component	Type	Side	Cord
R101	SMT	BOTTOM	K7	R221	SMT	BOTTOM	J4
R102	SMT	TOP	K7	R222	SMT	BOTTOM	K5
R103	SMT	TOP	K7	R223	SMT	BOTTOM	J5
R104	SMT	TOP	K7	R234	SMT	BOTTOM	K1
R105	SMT	BOTTOM	K7	R235	SMT	BOTTOM	K1
R106	SMT	TOP	K7	R236	SMT	BOTTOM	K1
R107	SMT	BOTTOM	K6	R237	SMT	BOTTOM	K3
R108	SMT	BOTTOM	J5	R238	SMT	TOP	K3
R109	SMT	BOTTOM	J6	R239	SMT	BOTTOM	K2
R110	SMT	TOP	J6	R240	SMT	BOTTOM	K3
R111	SMT	TOP	I6	R241	SMT	BOTTOM	K3
R112	SMT	TOP	I5	R242	SMT	TOP	J3
R113	SMT	BOTTOM	C6	R243	SMT	TOP	J3
R114	SMT	BOTTOM	D5	R244	SMT	BOTTOM	J2
R115	SMT	BOTTOM	C5	R245	SMT	BOTTOM	J2
R116	SMT	BOTTOM	C6	R246	SMT	TOP	J3
R117	SMT	BOTTOM	C6	R247	SMT	BOTTOM	K3
R118	SMT	TOP	J2	R248	SMT	TOP	J2
R119	SMT	TOP	F1	R250	SMT	BOTTOM	K4
R120	SMT	BOTTOM	D1	R251	SMT	BOTTOM	K3
R121	SMT	BOTTOM	E1	R252	SMT	BOTTOM	K4
R122	SMT	BOTTOM	E1	R253	SMT	BOTTOM	K3
R123	SMT	BOTTOM	E2	R254	SMT	BOTTOM	J4
R124	SMT	BOTTOM	E1	R255	SMT	TOP	K3
R125	SMT	BOTTOM	E2	R256	SMT	BOTTOM	J4
R126	SMT	TOP	E1	R257	SMT	BOTTOM	J4
R127	SMT	TOP	E1	R258	SMT	BOTTOM	K4
R128	SMT	TOP	F1	R259	SMT	BOTTOM	K5
R129	SMT	BOTTOM	D5	R260	SMT	TOP	K3
R130	SMT	BOTTOM	C2	R261	SMT	BOTTOM	J2
R131	SMT	BOTTOM	C7	R263	SMT	TOP	K2
R132	SMT	TOP	F1	R264	SMT	BOTTOM	J4
R133	SMT	TOP	F2	R301	SMT	TOP	K3
R134	SMT	TOP	D1	R302	SMT	TOP	K2
R135	SMT	TOP	D1	R303	SMT	TOP	K2
R201	SMT	BOTTOM	J3	R304	SMT	TOP	K2
R202	SMT	TOP	K4	R305	SMT	BOTTOM	K2
R203	SMT	TOP	J4	R306	SMT	BOTTOM	I3
R204	SMT	TOP	K4	R307	SMT	BOTTOM	J4
R205	SMT	TOP	K4	R308	SMT	BOTTOM	J3
R206	SMT	TOP	K4	R309	SMT	BOTTOM	J3
R207	SMT	TOP	K3	R310	SMT	BOTTOM	J3
R208	SMT	BOTTOM	K6	R311	SMT	BOTTOM	I3
R210	SMT	TOP	K6	R312	SMT	BOTTOM	J3
R211	SMT	TOP	K1	R313	SMT	BOTTOM	I3
R212	SMT	TOP	K1	R314	SMT	BOTTOM	I3
R214	SMT	BOTTOM	K6	R315	SMT	BOTTOM	I4
R215	SMT	BOTTOM	K6	R316	SMT	BOTTOM	I2
R216	SMT	TOP	K6	R317	SMT	TOP	I2
R217	SMT	BOTTOM	K7	R318	SMT	BOTTOM	H1
R218	SMT	BOTTOM	J5	R319	SMT	BOTTOM	H1
R219	SMT	TOP	K7	R320	SMT	TOP	I1
R220	SMT	BOTTOM	K5	R321	SMT	BOTTOM	I1

p. 1 of 8 — PC. Board No. 776-8

Copyright © 2004

Name Radioboard TRX3001C/TRDX3001C Date 4-8-03
Drawing No. 0-3006-03-7 Unit No. 3002

Component	Type	Side	Cord	Component	Type	Side	Cord
R322	SMT	BOTTOM	I1	R422	SMT	BOTTOM	G4
R323	SMT	BOTTOM	I2	R423	SMT	BOTTOM	G3
R324	SMT	BOTTOM	I2	R424	SMT	BOTTOM	G5
R325	SMT	BOTTOM	I2	R425	SMT	BOTTOM	H3
R326	SMT	BOTTOM	I2	R426	SMT	BOTTOM	H3
R327	SMT	BOTTOM	I3	R427	SMT	BOTTOM	H3
R328	SMT	BOTTOM	I2	R428	SMT	BOTTOM	H3
R329	SMT	BOTTOM	H2	R429	SMT	BOTTOM	H4
R330	SMT	BOTTOM	I2	R430	SMT	BOTTOM	H3
R331	SMT	TOP	I2	R431	SMT	BOTTOM	G4
R332	SMT	BOTTOM	I2	R432	SMT	BOTTOM	H4
R333	SMT	BOTTOM	H2	R433	SMT	BOTTOM	H4
R334	SMT	BOTTOM	H2	R434	SMT	BOTTOM	F3
R335	SMT	TOP	G2	R435	SMT	BOTTOM	E3
R336	SMT	BOTTOM	I4	R436	SMT	TOP	F2
R337	SMT	BOTTOM	I4	R437	SMT	TOP	F3
R338	SMT	BOTTOM	I3	R501	SMT	BOTTOM	B1
R339	SMT	BOTTOM	I4	R502	SMT	BOTTOM	A4
R340	SMT	BOTTOM	H5	R503	SMT	BOTTOM	A4
R341	SMT	TOP	H5	R504	SMT	BOTTOM	B4
R342	SMT	TOP	H4	R505	SMT	BOTTOM	F1
R343	SMT	TOP	H4	R506	SMT	BOTTOM	F2
R344	SMT	TOP	H4	R507	SMT	BOTTOM	F2
R345	SMT	TOP	I5	R508	SMT	BOTTOM	F2
R346	SMT	BOTTOM	D4	R509	SMT	BOTTOM	F2
R347	SMT	BOTTOM	D4	R510	SMT	BOTTOM	G2
R348	SMT	BOTTOM	E4	R511	SMT	TOP	E3
R349	SMT	BOTTOM	H3	R512	SMT	TOP	D3
R350	SMT	TOP	K2	R513	SMT	BOTTOM	G3
R351	SMT	BOTTOM	H4	R514	SMT	BOTTOM	G3
R352	SMT	BOTTOM	E4	R515	SMT	BOTTOM	G2
R353	SMT	BOTTOM	E5	R516	SMT	BOTTOM	G2
R401	SMT	TOP	G4	R517	SMT	BOTTOM	G1
R402	SMT	TOP	E4	R518	SMT	TOP	G2
R403	SMT	TOP	E4	R519	SMT	TOP	G1
R404	SMT	TOP	F4	R520	SMT	BOTTOM	G1
R405	SMT	TOP	F5	R521	SMT	TOP	G1
R406	SMT	TOP	F4	R522	SMT	BOTTOM	G1
R407	SMT	TOP	F4	R523	SMT	BOTTOM	G2
R408	SMT	TOP	F5	R524	SMT	BOTTOM	G2
R409	SMT	TOP	F4	R525	SMT	BOTTOM	G1
R410	SMT	TOP	G4	R526	SMT	BOTTOM	D2
R411	SMT	TOP	G4	R527	SMT	BOTTOM	D2
R412	SMT	BOTTOM	E3	R528	SMT	BOTTOM	D2
R413	SMT	BOTTOM	F2	R529	SMT	BOTTOM	E3
R414	SMT	BOTTOM	G3	R530	SMT	BOTTOM	E2
R415	SMT	BOTTOM	F2	R531	SMT	BOTTOM	D3
R416	SMT	TOP	F2	R532	SMT	BOTTOM	D3
R417	SMT	BOTTOM	F3	R533	SMT	BOTTOM	D3
R418	SMT	BOTTOM	F3	R534	SMT	BOTTOM	C3
R419	SMT	BOTTOM	F3	R535	SMT	BOTTOM	D3
R420	SMT	BOTTOM	F4	R536	SMT	BOTTOM	D3
R421	SMT	BOTTOM	F4	R537	SMT	BOTTOM	D3

p. 2 of 8 PC. Board No. 776-8

Copyright © 2004

Name Radioboard TRX3001C/TRDX3001C Date 4-8-03
Drawing No. 0-3006-03-7 Unit No. 3002

Component	Type	Side	Cord	Component	Type	Side	Cord
R538	SMT	BOTTOM	C3	C147	SMT	TOP	I2
R539	SMT	BOTTOM	C3	C148	SMT	TOP	J2
R540	SMT	BOTTOM	C3	C149	SMT	BOTTOM	B2
R541	SMT	BOTTOM	C3	C150	SMT	TOP	C6
R542	SMT	BOTTOM	C3	C151	SMT	TOP	F1
R543	SMT	BOTTOM	D2	C152	SMT	TOP	F2
R544	SMT	BOTTOM	J1	C153	SMT	BOTTOM	E1
C101	SMT	BOTTOM	K8	C154	SMT	TOP	K6
C102	SMT	TOP	K7	C155	SMT	TOP	F2
C103	SMT	BOTTOM	K7	C156	SMT	BOTTOM	E5
C104	SMT	BOTTOM	K6	C201	SMT	TOP	J1
C105	SMT	BOTTOM	K7	C203	SMT	TOP	K3
C106	SMT	BOTTOM	K7	C204	SMT	TOP	K4
C107	SMT	BOTTOM	K6	C205	SMT	TOP	K3
C108	SMT	TOP	K7	C206	SMT	TOP	K4
C109	SMT	TOP	K7	C207	SMT	TOP	K4
C110	SMT	TOP	J6	C208	SMT	TOP	K4
C111	SMT	TOP	J6	C209	SMT	TOP	K4
C112	SMT	TOP	H6	C210	SMT	TOP	K5
C113	SMT	TOP	H5	C211	SMT	TOP	K4
C114	SMT	TOP	G6	C212	SMT	TOP	K5
C115	SMT	TOP	D6	C213	SMT	TOP	K4
C116	SMT	TOP	F5	C214	SMT	TOP	K5
C117	SMT	TOP	G6	C215	SMT	TOP	K4
C118	SMT	BOTTOM	C6	C216	SMT	TOP	K5
C119	SMT	TOP	D6	C217	SMT	TOP	K5
C120	SMT	TOP	D5	C218	SMT	BOTTOM	K6
C121	SMT	BOTTOM	C5	C219	SMT	BOTTOM	K6
C122	SMT	TOP	D5	C220	SMT	TOP	K1
C123	SMT	TOP	C5	C221	SMT	TOP	K1
C124	SMT	TOP	C6	C222	SMT	TOP	K6
C125	SMT	TOP	C6	C223	SMT	BOTTOM	K6
C126	SMT	TOP	C7	C224	SMT	TOP	K7
C127	SMT	TOP	C7	C225	SMT	TOP	K6
C128	SMT	TOP	C7	C226	SMT	BOTTOM	J4
C129	SMT	TOP	I1	C227	SMT	BOTTOM	K5
C130	SMT	TOP	K1	C228	SMT	BOTTOM	K5
C131	SMT	TOP	I1	C230	SMT	TOP	K1
C132	SMT	TOP	F1	C232	SMT	TOP	J2
C133	SMT	TOP	J2	C234	SMT	TOP	K3
C134	SMT	TOP	J2	C235	SMT	BOTTOM	K2
C135	SMT	BOTTOM	E1	C236	SMT	BOTTOM	K2
C136	SMT	BOTTOM	D1	C237	SMT	BOTTOM	K3
C137	SMT	TOP	D1	C238	SMT	BOTTOM	K3
C138	SMT	TOP	E2	C239	SMT	TOP	J4
C139	SMT	TOP	E2	C240	SMT	BOTTOM	J3
C140	SMT	TOP	D1	C241	SMT	TOP	J3
C141	SMT	TOP	F1	C242	SMT	BOTTOM	K4
C142	SMT	BOTTOM	D6	C243	SMT	BOTTOM	K5
C143	SMT	TOP	C1	C244	SMT	BOTTOM	K5
C144	SMT	TOP	C2	C245	SMT	BOTTOM	K3
C145	SMT	TOP	D6	C246	SMT	BOTTOM	K3
C146	SMT	BOTTOM	E5	C247	SMT	BOTTOM	K3

p. 3 of 8 PC. Board No. 776-8

Copyright © 2004

Name Radioboard TRX3001C/TRDX3001C Date 4-8-03
Drawing No. 0-3006-03-7 Unit No. 3002

Component	Type	Side	Cord	Component	Type	Side	Cord
C249	SMT	TOP	J1	C346	SMT	TOP	I3
C250	SMT	BOTTOM	J4	C347	SMT	TOP	H4
C251	SMT	TOP	J1	C348	SMT	BOTTOM	H4
C252	SMT	TOP	K2	C349	SMT	TOP	I3
C253	SMT	TOP	J1	C350	SMT	TOP	I4
C254	SMT	BOTTOM	K6	C351	SMT	TOP	I4
C255	SMT	BOTTOM	H4	C352	SMT	TOP	I4
C256	SMT	TOP	K3	C353	SMT	TOP	I4
C257	SMT	BOTTOM	K4	C354	SMT	TOP	I5
C258	SMT	BOTTOM	K4	C355	SMT	BOTTOM	E4
C301	SMT	TOP	K3	C356	SMT	BOTTOM	D4
C302	SMT	TOP	K3	C357	SMT	BOTTOM	D4
C303	SMT	TOP	K2	C358	SMT	BOTTOM	D4
C304	SMT	TOP	K2	C359	SMT	BOTTOM	D5
C305	SMT	BOTTOM	K2	C360	SMT	TOP	K2
C306	SMT	BOTTOM	K2	C361	SMT	BOTTOM	J3
C307	SMT	BOTTOM	J4	C362	SMT	BOTTOM	J4
C308	SMT	BOTTOM	I4	C363	SMT	BOTTOM	E4
C309	SMT	BOTTOM	I4	C364	SMT	BOTTOM	E4
C310	SMT	BOTTOM	J2	C365	SMT	BOTTOM	E4
C311	SMT	BOTTOM	J3	C366	SMT	BOTTOM	E4
C312	SMT	BOTTOM	J4	C367	SMT	BOTTOM	E5
C313	SMT	BOTTOM	J3	C401	SMT	TOP	D4
C315	SMT	BOTTOM	I4	C402	SMT	TOP	D4
C317	SMT	BOTTOM	I3	C403	SMT	TOP	D4
C318	SMT	BOTTOM	I3	C404	SMT	TOP	E5
C319	SMT	TOP	K2	C405	SMT	TOP	E4
C320	SMT	TOP	I2	C406	SMT	TOP	E4
C321	SMT	BOTTOM	H1	C407	SMT	TOP	E5
C322	SMT	BOTTOM	I1	C408	SMT	TOP	E4
C323	SMT	TOP	J2	C409	SMT	TOP	F4
C324	SMT	BOTTOM	I2	C410	SMT	TOP	F5
C325	SMT	TOP	I2	C411	SMT	TOP	F4
C326	SMT	BOTTOM	I2	C412	SMT	TOP	G5
C327	SMT	BOTTOM	I3	C413	SMT	TOP	G4
C328	SMT	BOTTOM	I3	C414	SMT	TOP	G5
C329	SMT	TOP	H3	C415	SMT	TOP	G4
C330	SMT	BOTTOM	I3	C416	SMT	TOP	G4
C331	SMT	BOTTOM	I2	C417	SMT	TOP	G4
C332	SMT	BOTTOM	I2	C418	SMT	TOP	G5
C333	SMT	TOP	H2	C419	SMT	TOP	F2
C334	SMT	BOTTOM	I2	C420	SMT	TOP	F2
C335	SMT	BOTTOM	H2	C421	SMT	TOP	F2
C336	SMT	BOTTOM	H2	C422	SMT	BOTTOM	F3
C337	SMT	TOP	G2	C423	SMT	BOTTOM	F2
C338	SMT	BOTTOM	I4	C424	SMT	BOTTOM	E3
C339	SMT	BOTTOM	I3	C425	SMT	TOP	F2
C340	SMT	BOTTOM	I3	C426	SMT	BOTTOM	F3
C341	SMT	BOTTOM	H3	C427	SMT	TOP	G3
C342	SMT	TOP	H4	C428	SMT	TOP	F3
C343	SMT	BOTTOM	H4	C429	SMT	BOTTOM	F4
C344	SMT	TOP	I4	C430	SMT	BOTTOM	F3
C345	SMT	TOP	I3	C431	SMT	BOTTOM	E4

p. 4 of 8 PC. Board No. 776-8

Copyright © 2004

Name Radioboard TRX3001C/TRDX3001C Date 4-8-03
Drawing No. 0-3006-03-7 Unit No. 3002

Component	Type	Side	Cord	Component	Type	Side	Cord
C432	SMT	BOTTOM	F4	C536	SMT	BOTTOM	D2
C433	SMT	BOTTOM	F3	C537	SMT	BOTTOM	D2
C434	SMT	BOTTOM	F4	C538	SMT	BOTTOM	E2
C435	SMT	BOTTOM	F3	C539	SMT	BOTTOM	D3
C436	SMT	BOTTOM	G5	C540	SMT	BOTTOM	C3
C437	SMT	BOTTOM	G4	C541	SMT	TOP	J2
C438	SMT	BOTTOM	H3	C542	SMT	TOP	J1
C439	SMT	BOTTOM	H3	C543	SMT	BOTTOM	C2
C440	SMT	BOTTOM	H3	C544	SMT	BOTTOM	C2
C441	SMT	BOTTOM	G4	C545	SMT	TOP	K1
C442	SMT	BOTTOM	H3	C546	SMT	TOP	C4
C443	SMT	BOTTOM	I2	C547	SMT	TOP	C4
C444	SMT	BOTTOM	G3	F101	SMT	BOTTOM	B2
C445	SMT	TOP	H4	F102	SMT	BOTTOM	E5
C446	SMT	BOTTOM	G4	F401	SMT	TOP	G3
C447	SMT	TOP	G4	F402	SMT	TOP	G3
C448	SMT	TOP	G4	F403	SMT	TOP	E3
C449	SMT	TOP	D4	F404	SMT	TOP	E3
C501	SMT	BOTTOM	B2	F501	SMT	BOTTOM	B3
C502	SMT	BOTTOM	A2	F502	SMT	BOTTOM	B3
C503	SMT	BOTTOM	A3	F503	SMT	BOTTOM	B1
C504	SMT	BOTTOM	B3	F504	SMT	TOP	H2
C505	SMT	BOTTOM	C4	F505	SMT	TOP	H1
C506	SMT	TOP	C3	F506	SMT	TOP	C4
C507	SMT	BOTTOM	F2	F507	SMT	TOP	C4
C508	SMT	BOTTOM	F2	X301	SMT	TOP	I3
C509	SMT	TOP	E2	X302	SMT	TOP	I3
C510	SMT	TOP	E3	T101	SMT	TOP	K7
C511	SMT	BOTTOM	G3	T102	SMT	BOTTOM	K6
C512	SMT	TOP	D3	T103	SMT	BOTTOM	K6
C513	SMT	TOP	D3	T104	SMT	TOP	J7
C514	SMT	BOTTOM	K1	T105	SMT	BOTTOM	C6
C515	SMT	TOP	J1	T106	SMT	BOTTOM	E1
C516	SMT	TOP	I1	T108	SMT	BOTTOM	E2
C517	SMT	TOP	I2	T110	SMT	BOTTOM	C7
C518	SMT	BOTTOM	G2	T111	SMT	BOTTOM	C7
C519	SMT	BOTTOM	G1	T201	SMT	TOP	K4
C520	SMT	BOTTOM	G2	T202	SMT	TOP	K5
C521	SMT	TOP	G2	T204	SMT	BOTTOM	K7
C522	SMT	BOTTOM	G1	T205	SMT	BOTTOM	K5
C523	SMT	TOP	G1	T206	SMT	BOTTOM	K5
C524	SMT	TOP	G2	T207	SMT	BOTTOM	K5
C525	SMT	BOTTOM	G1	T208	SMT	TOP	J2
C526	SMT	TOP	G1	T209	SMT	BOTTOM	K3
C527	SMT	BOTTOM	G1	T210	SMT	TOP	K3
C528	SMT	BOTTOM	F1	T211	SMT	BOTTOM	J4
C529	SMT	BOTTOM	G1	T301	SMT	BOTTOM	J3
C530	SMT	BOTTOM	C2	T302	SMT	BOTTOM	J3
C531	SMT	BOTTOM	G2	T303	SMT	BOTTOM	H2
C532	SMT	TOP	G2	T304	SMT	BOTTOM	I4
C533	SMT	TOP	J2	T305	SMT	TOP	H3
C534	SMT	BOTTOM	D2	T306	SMT	TOP	I4
C535	SMT	BOTTOM	D2	T401	SMT	TOP	F5

p. 5 of 8 PC. Board No. 776-8

Copyright © 2004

Name Radioboard TRX3001C/TRDX3001C Date 4-8-03
Drawing No. 0-3006-03-7 Unit No. 3002

Component	Type	Side	Cord	Component	Type	Side	Cord
T402	SMT	BOTTOM	E3	IC205	SMT	TOP	J2
T403	SMT	BOTTOM	E3	IC206	SMT	BOTTOM	K4
T404	SMT	BOTTOM	E3	IC207	SMT	TOP	J2
T405	SMT	BOTTOM	G4	IC301	SMT	BOTTOM	I4
T406	SMT	BOTTOM	H3	IC302	SMT	BOTTOM	I1
T501	SMT	BOTTOM	A2	IC303	SMT	BOTTOM	D4
T502	SMT	BOTTOM	C4	IC501	SMT	TOP	D2
T503	SMT	BOTTOM	F2	IC502	SMT	TOP	G2
T504	SMT	BOTTOM	G2	IC503	SMT	BOTTOM	C3
T505	SMT	BOTTOM	G2	TR401	SMT	TOP	H3
T506	SMT	TOP	D3	TR402	SMT	TOP	H3
T507	SMT	TOP	D3	L101	SMT	TOP	K7
T508	SMT	BOTTOM	D3	L102	SMT	TOP	K6
T509	SMT	BOTTOM	D3	L103	SMT	TOP	H5
D101	SMT	TOP	E5	L104	SMT	TOP	F6
D102	SMT	TOP	E5	L105	SMT	TOP	E6
D103	SMT	BOTTOM	D5	L106	SMT	TOP	D6
D104	SMT	BOTTOM	D6	L107	SMT	TOP	C6
D105	SMT	TOP	F1	L108	SMT	TOP	C7
D201	SMT	TOP	J4	L109	SMT	TOP	C8
D202	SMT	TOP	J4	L110	SMT	TOP	I1
D203	SMT	TOP	K4	L111	SMT	TOP	K6
D301	SMT	TOP	I2	L201	SMT	TOP	J4
D302	SMT	BOTTOM	I3	L202	SMT	TOP	K4
D303	SMT	BOTTOM	I2	L203	SMT	TOP	K4
D304	SMT	TOP	I4	L204	SMT	BOTTOM	K5
D305	SMT	TOP	I4	L205	SMT	BOTTOM	H5
D306	SMT	BOTTOM	D4	L206	SMT	BOTTOM	K4
D307	SMT	BOTTOM	E4	L301	SMT	TOP	H2
D401	SMT	TOP	D4	L302	SMT	TOP	I5
D402	SMT	TOP	E4	L303	SMT	BOTTOM	H4
D403	SMT	TOP	G5	L304	SMT	TOP	I4
D404	SMT	TOP	G5	L305	SMT	TOP	I4
D405	SMT	TOP	F2	L307	SMT	TOP	J4
D406	SMT	TOP	F2	L401	SMT	TOP	D5
D407	SMT	BOTTOM	F3	L402	SMT	TOP	D5
D408	SMT	BOTTOM	F4	L403	SMT	TOP	E5
D409	SMT	BOTTOM	F4	L404	SMT	TOP	E4
D410	SMT	BOTTOM	G3	L405	SMT	TOP	F4
D501	SMT	BOTTOM	B4	L406	SMT	TOP	F5
D502	SMT	BOTTOM	A1	L407	SMT	TOP	F4
D503	SMT	BOTTOM	G2	L408	SMT	TOP	H5
D504	SMT	BOTTOM	G1	L409	SMT	TOP	H4
D505	SMT	TOP	G1	L410	SMT	TOP	F3
D506	SMT	TOP	G1	L411	SMT	BOTTOM	G4
D507	SMT	BOTTOM	D3	L412	SMT	BOTTOM	I3
IC101	SMT	TOP	G6	L413	SMT	TOP	D4
IC102	LEAD	TOP	E1	L501	SMT	BOTTOM	G2
IC103	LEAD	TOP	E1	L502	SMT	BOTTOM	K2
IC201	SMT	TOP	K1	L503	SMT	BOTTOM	I1
IC202	SMT	BOTTOM	J3	L504	SMT	BOTTOM	I1
IC203	SMT	BOTTOM	K2	L505	SMT	TOP	G1
IC204	SMT	TOP	J2	L506	SMT	BOTTOM	H1

p. 6 of 8 PC. Board No. 776-8

Copyright © 2004

Name Radioboard TRX3001C/TRDX3001C Date 4-8-03
Drawing No. 0-3006-03-7 Unit No. 3002

Component	Type	Side	Cord	Component	Type	Side	Cord
FUSE1	SMT	BOTTOM	F1	TP316	SMT	BOTTOM	H4
FUSE2	SMT	BOTTOM	E2	TP317	SMT	BOTTOM	D4
FUSE3	SMT	BOTTOM	B3	TP401	SMT	BOTTOM	F4
TP101	SMT	BOTTOM	K7	TP402	SMT	BOTTOM	F2
TP102	SMT	BOTTOM	K7	TP403	SMT	BOTTOM	F3
TP103	SMT	BOTTOM	K6	TP404	SMT	BOTTOM	F2
TP104	SMT	BOTTOM	J5	TP405	SMT	BOTTOM	F3
TP105	SMT	BOTTOM	C5	TP406	SMT	BOTTOM	G4
TP106	SMT	BOTTOM	C6	TP407	SMT	BOTTOM	H4
TP107	SMT	BOTTOM	I1	TP408	SMT	BOTTOM	H4
TP108	SMT	BOTTOM	J2	TP501	SMT	BOTTOM	A2
TP109	SMT	BOTTOM	I1	TP502	SMT	BOTTOM	B4
TP110	SMT	BOTTOM	K1	TP503	SMT	BOTTOM	B2
TP111	SMT	BOTTOM	D1	TP504	SMT	BOTTOM	A2
TP114	SMT	BOTTOM	C7	TP505	SMT	BOTTOM	D3
TP115	SMT	BOTTOM	J2	TP506	SMT	BOTTOM	A5
TP116	SMT	BOTTOM	B2	TP507	SMT	BOTTOM	A5
TP117	SMT	BOTTOM	A3	TP508	SMT	BOTTOM	K2
TP201	SMT	BOTTOM	J1	TP509	SMT	BOTTOM	I2
TP202	SMT	BOTTOM	K4	TP510	SMT	BOTTOM	G2
TP203	SMT	BOTTOM	K5	TP511	SMT	BOTTOM	G1
TP204	SMT	BOTTOM	J5	TP512	SMT	BOTTOM	G1
TP205	SMT	BOTTOM	K1	TP513	SMT	BOTTOM	E2
TP206	SMT	BOTTOM	K6	TP514	SMT	BOTTOM	D3
TP208	SMT	BOTTOM	K1	TP515	SMT	BOTTOM	J2
TP209	SMT	BOTTOM	J1	TP516	SMT	BOTTOM	J1
TP210	SMT	BOTTOM	K2	TP517	SMT	BOTTOM	J1
TP211	SMT	BOTTOM	K3	TP518	SMT	BOTTOM	K1
TP212	SMT	BOTTOM	J2	CP101	LEAD	BOTTOM	I6
TP213	SMT	BOTTOM	K4	CP201	LEAD	BOTTOM	K7
TP214	SMT	BOTTOM	K4	CP401	LEAD	BOTTOM	G3
TP215	SMT	BOTTOM	J1	CP402	LEAD	BOTTOM	G3
TP216	SMT	BOTTOM	J1	CP403	LEAD	BOTTOM	H2
TP217	SMT	BOTTOM	K2	MP101	SMT	TOP	K1
TP218	SMT	BOTTOM	J1	MP201	SMT	TOP	K3
TP219	SMT	BOTTOM	K2	MP202	SMT	TOP	K2
TP220	SMT	BOTTOM	K2	MP203	SMT	TOP	K2
TP221	SMT	BOTTOM	K1	MP204	SMT	TOP	K2
TP301	SMT	BOTTOM	I5	MP205	SMT	TOP	K2
TP302	SMT	BOTTOM	K2	MP206	SMT	TOP	K2
TP303	SMT	BOTTOM	J4	MP301	SMT	TOP	K3
TP304	SMT	BOTTOM	I3	JU401	SMT	TOP	G3
TP305	SMT	BOTTOM	J2	J1	LEAD	TOP	B7
TP306	SMT	BOTTOM	K1	J2	SMT	TOP	I1
TP307	SMT	BOTTOM	J2	J3	LEAD	TOP	B2
TP308	SMT	BOTTOM	I2	JA1	SMT	TOP	D4
TP309	SMT	BOTTOM	I1	JA2	SMT	TOP	D4
TP310	SMT	BOTTOM	I3	W1	SMT	TOP	A1
TP311	SMT	BOTTOM	I2	W2	SMT	BOTTOM	A1
TP312	SMT	BOTTOM	H3	W3	SMT	TOP	A8
TP313	SMT	BOTTOM	I3	W4	SMT	BOTTOM	A8
TP314	SMT	BOTTOM	I3	W5	SMT	TOP	L1
TP315	SMT	BOTTOM	I5	W6	SMT	TOP	L8

p. 7 of 8 PC. Board No. 776-8

Copyright © 2004

Name Radioboard TRX3001C/TRDX3001C Date 4-8-03
Drawing No. 0-3006-03-7 Unit No. 3002

Component	Type	Side	Cord	Component	Type	Side	Cord
W7	SMT	BOTTOM	L8				
W8	SMT	BOTTOM	L1				
V1	SMT	BOTTOM	A5				
V2	SMT	BOTTOM	A5				

p. 8 of 8 PC. Board No. 776-8

Copyright © 2004

11.5 Partlist

Partlist for Radioboard TRX3001C/TRDX3001C Date 1-8-03
Drawing No. 0-3006-03-7 Unit No. 3002

Component	Description		Value	Niros No.
	Simplex 25KHz		S_25	3002
	Simplex 12,5KHz		S_12	3003
	Simplex 12,5/25KHz		S_SW	3012
	Duplex 25KHz		D_25	3202
	Duplex 12,5KHz		D_12	3203
	Duplex 12,5/25KHz		D_SW	3212
	Simplex Base 25KHz		SB_25	3302
	Simplex Base 12,5KHz		SB_12	3303
	Simplex Base 12,5/25KHz		SB_SW	3312
R101	Resistor,chip1206		150 Ohm	12151
R102	Resistor,chip603		820 Ohm	14821
R103	Resistor,chip603		220 Ohm	14221
R104	Resistor,chip603		150 Ohm	14151
R105	Resistor,chip603		1 Kohm	14102
R106	Resistor,chip603		1 Kohm	14102
R107	Resistor,chip603		22 Kohm	14223
R108	Resistor,chip603		150 Ohm	14151
R109	Resistor,chip1206		5,6 Ohm	12569
R110	Resistor,chip805		470 Ohm	13471
R111	Resistor,chip1206		10 Ohm	12100
R112	Resistor,chip805		470 Ohm	13471
R113	Resistor,chip1218	S_25	270 Ohm	10925
	Resistor,chip1218	S_12	270 Ohm	10925
	Resistor,chip1218	S_SW	270 Ohm	10925
	Resistor,chip1218	D_25	Not used	
	Resistor,chip1218	D_12	Not used	
	Resistor,chip1218	D_SW	Not used	
	Resistor,chip1218	SB_25	270 Ohm	10925
	Resistor,chip1218	SB_12	270 Ohm	10925
	Resistor,chip1218	SB_SW	270 Ohm	10925
R114	Resistor,chip603	S_25	2,7 Kohm	14272
	Resistor,chip603	S_12	2,7 Kohm	14272
	Resistor,chip603	S_SW	2,7 Kohm	14272
	Resistor,chip603	D_25	Not used	
	Resistor,chip603	D_12	Not used	
	Resistor,chip603	D_SW	Not used	
	Resistor,chip603	SB_25	2,7 Kohm	14272
	Resistor,chip603	SB_12	2,7 Kohm	14272
	Resistor,chip603	SB_SW	2,7 Kohm	14272
R115	Resistor,chip805	S_25	2,2 Kohm	13222
	Resistor,chip805	S_12	2,2 Kohm	13222
	Resistor,chip805	S_SW	2,2 Kohm	13222
	Resistor,chip805	D_25	Not used	
	Resistor,chip805	D_12	Not used	
	Resistor,chip805	D_SW	Not used	
	Resistor,chip805	SB_25	2,2 Kohm	13222
	Resistor,chip805	SB_12	2,2 Kohm	13222

p. 1 of 31 PC. Board No. 776-8

Copyright © 2004

Partlist for Radioboard TRX3001C/TRDX3001C Date 1-8-03
Drawing No. 0-3006-03-7 Unit No. 3002

Component	Description	Value	Niros No.
	Resistor,chip805 SB_SW	2,2 Kohm	13222
R116	Resistor,chip603 S_25	10 Kohm	14103
	Resistor,chip603 S_12	10 Kohm	14103
	Resistor,chip603 S_SW	10 Kohm	14103
	Resistor,chip603 D_25	Not used	
	Resistor,chip603 D_12	Not used	
	Resistor,chip603 D_SW	Not used	
	Resistor,chip603 SB_25	10 Kohm	14103
	Resistor,chip603 SB_12	10 Kohm	14103
	Resistor,chip603 SB_SW	10 Kohm	14103
R117	Resistor,chip603 S_25	10 Kohm	14103
	Resistor,chip603 S_12	10 Kohm	14103
	Resistor,chip603 S_SW	10 Kohm	14103
	Resistor,chip603 D_25	Not used	
	Resistor,chip603 D_12	Not used	
	Resistor,chip603 D_SW	Not used	
	Resistor,chip603 SB_25	10 Kohm	14103
	Resistor,chip603 SB_12	10 Kohm	14103
	Resistor,chip603 SB_SW	10 Kohm	14103
R118	Resistor,chip603	3,3 Kohm	14332
R119	Resistor,chip603	47 Kohm	14473
R120	Resistor,chip603	47 Kohm	14473
R121	Resistor,chip603	100 Kohm	14104
R122	Resistor,chip603	180 Kohm	14184
R123	Resistor,chip603	4,7 Kohm	14472
R124	Resistor,chip603	100 Kohm	14104
R125	Resistor,chip603	18 Kohm	14183
R126	Resistor,chip1206	390 Ohm	12391
R127	Resistor,chip603	12 Ohm	14120
R128	Resistor,chip603	1,8 Mohm	14185
R129	Resistor,chip603	820 Kohm	14824
R130	Resistor,chip603	4,7 Kohm	14472
R131	Resistor,chip603 S_25	10 Kohm	14103
	Resistor,chip603 S_12	10 Kohm	14103
	Resistor,chip603 S_SW	10 Kohm	14103
	Resistor,chip603 D_25	Not used	
	Resistor,chip603 D_12	Not used	
	Resistor,chip603 D_SW	Not used	
	Resistor,chip603 SB_25	10 Kohm	14103
	Resistor,chip603 SB_12	10 Kohm	14103
	Resistor,chip603 SB_SW	10 Kohm	14103
R132	Resistor,chip603	820 Kohm	14824
R133	Resistor,chip603	27 Kohm	14273
R134	Resistor,chip805	2,2 Ohm	13229
R135	Resistor,chip805	2,2 Ohm	13229
R201	Resistor,chip603	1,8 Kohm	14182
R202	Resistor,chip603	100 Kohm	14104

p. 2 of 31 PC. Board No. 776-8

Copyright © 2004

Partlist for Radioboard TRX3001C/TRDX3001C Date 1-8-03
Drawing No. 0-3006-03-7 Unit No. 3002

Component	Description		Value	Niros No.
R203	Resistor,chip603	S_25	Not used	
	Resistor,chip603	S_12	68 Kohm	14683
	Resistor,chip603	S_SW	Not used	
	Resistor,chip603	D_25	Not used	
	Resistor,chip603	D_12	Not used	
	Resistor,chip603	D_SW	Not used	
	Resistor,chip603	SB_25	Not used	
	Resistor,chip603	SB_12	68 Kohm	14683
	Resistor,chip603	SB_SW	Not used	
R204	Resistor,chip603		1,2 Kohm	14122
R205	Resistor,chip603		220 Ohm	14221
R206	Resistor,chip603		100 Kohm	14104
R207	Resistor,chip603		15 Ohm	14150
R208	Resistor,chip603		56 Ohm	14560
R210	Resistor,chip603		10 Ohm	14100
R211	Resistor,chip603		100 Kohm	14104
R212	Resistor,chip603		5,1 Kohm	14512
R214	Resistor,chip603		4,7 Kohm	14472
R215	Resistor,chip603		1 Kohm	14102
R216	Resistor,chip603		270 Ohm	14271
R217	Resistor,chip603		100 Ohm	14101
R218	Resistor,chip603		1,5 Kohm	14152
R219	Resistor,chip603		100 Ohm	14101
R220	Resistor,chip603		22 Kohm	14223
R221	Resistor,chip603		8,2 Kohm	14822
R222	Resistor,chip603		2,2 Kohm	14222
R223	Resistor,chip603		150 Ohm	14151
R234	Resistor,chip603		1 Kohm	14102
R235	Resistor,chip603		1 Kohm	14102
R236	Resistor,chip603		1 Kohm	14102
R237	Resistor,chip603	S_25	Not used	
	Resistor,chip603	S_12	Not used	
	Resistor,chip603	S_SW	2,2 Kohm	14222
	Resistor,chip603	D_25	Not used	
	Resistor,chip603	D_12	Not used	
	Resistor,chip603	D_SW	2,2 Kohm	14222
	Resistor,chip603	SB_25	Not used	
	Resistor,chip603	SB_12	Not used	
	Resistor,chip603	SB_SW	2,2 Kohm	14222
R238	Resistor,chip603		390 Kohm	14394
R239	Resistor,chip603		Not used	
R240	Resistor,chip603		Not used	
R241	Resistor,chip603		Not used	
R242	Resistor,chip603		Not used	
R243	Resistor,chip603		6,8 Kohm	14682
R244	Resistor,chip603		1,5 Mohm	14155

p. 3 of 31 PC. Board No. 776-8

Copyright © 2004

Partlist for Radioboard TRX3001C/TRDX3001C Date 1-8-03
Drawing No. 0-3006-03-7 Unit No. 3002

Component	Description	Value	Niros No.
R245	Resistor,chip603	1,5 Mohm	14155
R246	Resistor,chip603	Not used	
R247	Resistor,chip603	100 Ohm	14101
R248	Resistor,chip603	Not used	
R250	Resistor,chip603	100 Ohm	14101
R251	Resistor,chip603	470 Kohm	14474
R252	Resistor,chip603	56 Kohm	14563
R253	Resistor,chip603	100 Kohm	14104
R254	Resistor,chip603	220 Ohm	14221
R255	Resistor,chip603	4,7 Kohm	14472
R256	Resistor,chip603	1 Kohm	14102
R257	Resistor,chip603	1 Kohm	14102
R258	Resistor,chip603	1 Kohm	14102
R259	Resistor,chip603	1,5 Kohm	14152
R260	Resistor,chip603	39 Kohm	14393
R261	Resistor,chip603	5,6 Kohm	14562
R263	Resistor,chip603	2,2 Mohm	14225
R264	Resistor,chip603	1 Mohm	14105
R301	Resistor,chip603	Not used	
R302	Resistor,chip603	Not used	
R303	Resistor,chip603	Not used	
R304	Resistor,chip603	10 Kohm	14103
R305	Resistor,chip603	27 Kohm	14273
R306	Resistor,chip603	100 Ohm	14101
R307	Resistor,chip603	100 Ohm	14101
R308	Resistor,chip603	220 Kohm	14224
R309	Resistor,chip603	56 Kohm	14563
R310	Resistor,chip603	100 Kohm	14104
R311	Resistor,chip603	220 Ohm	14221
R312	Resistor,chip603	100 Kohm	14104
R313	Resistor,chip603	1 Kohm	14102
R314	Resistor,chip603	1 Kohm	14102
R315	Resistor,chip603	1 Kohm	14102
R316	Resistor,chip603	Not used	
R317	Resistor,ntc	Not used	
R318	Resistor,chip603	Not used	
R319	Resistor,chip603	Not used	
R320	Resistor,chip603	Not used	
R321	Resistor,chip603	Not used	
R322	Resistor,chip603	Not used	
R323	Resistor,chip603	Not used	
R324	Resistor,chip603	100 Kohm	14104
R325	Resistor,ntc	Not used	
R326	Resistor,chip603	Not used	
R327	Resistor,chip603	Not used	

p. 4 of 31 PC. Board No. 776-8

Copyright © 2004

Partlist for Radioboard TRX3001C/TRDX3001C Date 1-8-03
Drawing No. 0-3006-03-7 Unit No. 3002

Component	Description		Value	Niros No.
R328	Resistor,chip603		100 Kohm	14104
R329	Resistor,chip603		100 Kohm	14104
R330	Resistor,chip603		100 Kohm	14104
R331	Resistor,chip603		4,7 Kohm	14472
R332	Resistor,chip603		47 Kohm	14473
R333	Resistor,chip603		1,5 Kohm	14152
R334	Resistor,chip603		680 Ohm	14681
R335	Resistor,chip603		100 Ohm	14101
R336	Resistor,chip603		680 Ohm	14681
R337	Resistor,chip603		150 Ohm	14151
R338	Resistor,chip603		8,2 Kohm	14822
R339	Resistor,chip603		2,2 Kohm	14222
R340	Resistor,chip603		10 Ohm	14100
R341	Resistor,chip603		15 Ohm	14150
R342	Resistor,chip603		220 Ohm	14221
R343	Resistor,chip603		1 Kohm	14102
R344	Resistor,chip603		100 Kohm	14104
R345	Resistor,chip603		68 Kohm	14683
R346	Resistor,chip603		680 Kohm	14684
R347	Resistor,chip603		47 Ohm	14470
R348	Resistor,chip603		100 Ohm	14101
R349	Resistor,chip603		1 Kohm	14102
R350	Resistor,chip603		8,2 Kohm	14822
R351	Resistor,chip603		220 Ohm	14221
R352	Resistor,chip603	S_25	10 Kohm	14103
	Resistor,chip603	S_12	10 Kohm	14103
	Resistor,chip603	S_SW	10 Kohm	14103
	Resistor,chip603	D_25	Not used	
	Resistor,chip603	D_12	Not used	
	Resistor,chip603	D_SW	Not used	
	Resistor,chip603	SB_25	10 Kohm	14103
	Resistor,chip603	SB_12	10 Kohm	14103
	Resistor,chip603	SB_SW	10 Kohm	14103
R353	Resistor,chip603	S_25	47 Kohm	14473
	Resistor,chip603	S_12	47 Kohm	14473
	Resistor,chip603	S_SW	47 Kohm	14473
	Resistor,chip603	D_25	Not used	
	Resistor,chip603	D_12	Not used	
	Resistor,chip603	D_SW	Not used	
	Resistor,chip603	SB_25	47 Kohm	14473
	Resistor,chip603	SB_12	47 Kohm	14473
	Resistor,chip603	SB_SW	47 Kohm	14473
R401	Resistor,chip603		47 Kohm	14473
R402	Resistor,chip603		100 Kohm	14104
R403	Resistor,chip603		100 Kohm	14104
R404	Resistor,chip603		4,7 Kohm	14472
R405	Resistor,chip603		820 Ohm	14821

p. 5 of 31 PC. Board No. 776-8

Copyright © 2004

Partlist for Radioboard TRX3001C/TRDX3001C Date 1-8-03
Drawing No. 0-3006-03-7 Unit No. 3002

Component	Description		Value	Niros No.
R406	Resistor,chip603		4,7 Kohm	14472
R407	Resistor,chip603		47 Ohm	14470
R408	Resistor,chip603		5,6 Ohm	14569
R409	Resistor,chip603		560 Ohm	14561
R410	Resistor,chip603		100 Kohm	14104
R411	Resistor,chip603		100 Kohm	14104
R412	Resistor,chip603	S_25	Not used	
	Resistor,chip603	S_12	Not used	
	Resistor,chip603	S_SW	6,8 Kohm	14682
	Resistor,chip603	D_25	Not used	
	Resistor,chip603	D_12	Not used	
	Resistor,chip603	D_SW	6,8 Kohm	14682
	Resistor,chip603	SB_25	Not used	
	Resistor,chip603	SB_12	Not used	
	Resistor,chip603	SB_SW	6,8 Kohm	14682
R413	Resistor,chip603	S_25	Not used	
	Resistor,chip603	S_12	Not used	
	Resistor,chip603	S_SW	2,2 Kohm	14222
	Resistor,chip603	D_25	Not used	
	Resistor,chip603	D_12	Not used	
	Resistor,chip603	D_SW	2,2 Kohm	14222
	Resistor,chip603	SB_25	Not used	
	Resistor,chip603	SB_12	Not used	
	Resistor,chip603	SB_SW	2,2 Kohm	14222
R414	Resistor,chip603	S_25	Not used	
	Resistor,chip603	S_12	Not used	
	Resistor,chip603	S_SW	470 Ohm	14471
	Resistor,chip603	D_25	Not used	
	Resistor,chip603	D_12	Not used	
	Resistor,chip603	D_SW	470 Ohm	14471
	Resistor,chip603	SB_25	Not used	
	Resistor,chip603	SB_12	Not used	
	Resistor,chip603	SB_SW	470 Ohm	14471
R415	Resistor,chip603	S_25	Not used	
	Resistor,chip603	S_12	Not used	
	Resistor,chip603	S_SW	4,7 Kohm	14472
	Resistor,chip603	D_25	Not used	
	Resistor,chip603	D_12	Not used	
	Resistor,chip603	D_SW	4,7 Kohm	14472
	Resistor,chip603	SB_25	Not used	
	Resistor,chip603	SB_12	Not used	
	Resistor,chip603	SB_SW	4,7 Kohm	14472
R416	Resistor,chip603	S_25	Not used	
	Resistor,chip603	S_12	Not used	
	Resistor,chip603	S_SW	390 Ohm	14391
	Resistor,chip603	D_25	Not used	
	Resistor,chip603	D_12	Not used	
	Resistor,chip603	D_SW	390 Ohm	14391

p. 6 of 31 PC. Board No. 776-8

Copyright © 2004

Partlist for Radioboard TRX3001C/TRDX3001C Date 1-8-03
Drawing No. 0-3006-03-7 Unit No. 3002

Component	Description	Value	Niros No.
	Resistor,chip603 SB_25	Not used	
	Resistor,chip603 SB_12	Not used	
	Resistor,chip603 SB_SW	390 Ohm	14391
R417	Resistor,chip603 S_25	Not used	
	Resistor,chip603 S_12	Not used	
	Resistor,chip603 S_SW	1,8 Kohm	14182
	Resistor,chip603 D_25	Not used	
	Resistor,chip603 D_12	Not used	
	Resistor,chip603 D_SW	1,8 Kohm	14182
	Resistor,chip603 SB_25	Not used	
	Resistor,chip603 SB_12	Not used	
	Resistor,chip603 SB_SW	1,8 Kohm	14182
R418	Resistor,chip603 S_25	Not used	
	Resistor,chip603 S_12	Not used	
	Resistor,chip603 S_SW	330 Ohm	14331
	Resistor,chip603 D_25	Not used	
	Resistor,chip603 D_12	Not used	
	Resistor,chip603 D_SW	330 Ohm	14331
	Resistor,chip603 SB_25	Not used	
	Resistor,chip603 SB_12	Not used	
	Resistor,chip603 SB_SW	330 Ohm	14331
R419	Resistor,chip603 S_25	Not used	
	Resistor,chip603 S_12	Not used	
	Resistor,chip603 S_SW	1,5 Kohm	14152
	Resistor,chip603 D_25	Not used	
	Resistor,chip603 D_12	Not used	
	Resistor,chip603 D_SW	1,5 Kohm	14152
	Resistor,chip603 SB_25	Not used	
	Resistor,chip603 SB_12	Not used	
	Resistor,chip603 SB_SW	1,5 Kohm	14152
R420	Resistor,chip603 S_25	Not used	
	Resistor,chip603 S_12	Not used	
	Resistor,chip603 S_SW	1,8 Kohm	14182
	Resistor,chip603 D_25	Not used	
	Resistor,chip603 D_12	Not used	
	Resistor,chip603 D_SW	1,8 Kohm	14182
	Resistor,chip603 SB_25	Not used	
	Resistor,chip603 SB_12	Not used	
	Resistor,chip603 SB_SW	1,8 Kohm	14182
R421	Resistor,chip603 S_25	Not used	
	Resistor,chip603 S_12	Not used	
	Resistor,chip603 S_SW	680 Ohm	14681
	Resistor,chip603 D_25	Not used	
	Resistor,chip603 D_12	Not used	
	Resistor,chip603 D_SW	680 Ohm	14681
	Resistor,chip603 SB_25	Not used	
	Resistor,chip603 SB_12	Not used	
	Resistor,chip603 SB_SW	680 Ohm	14681

Copyright © 2004

Partlist for Radioboard TRX3001C/TRDX3001C Date 1-8-03
Drawing No. 0-3006-03-7 Unit No. 3002

Component	Description		Value	Niros No.
R422	Resistor,chip603	S_25	1 Kohm	14102
	Resistor,chip603	S_12	1,5 Kohm	14152
	Resistor,chip603	S_SW	10 Kohm	14103
	Resistor,chip603	D_25	1 Kohm	14102
	Resistor,chip603	D_12	1,5 Kohm	14152
	Resistor,chip603	D_SW	10 Kohm	14103
	Resistor,chip603	SB_25	1 Kohm	14102
	Resistor,chip603	SB_12	1,5 Kohm	14152
	Resistor,chip603	SB_SW	10 Kohm	14103
R423	Resistor,chip603		120 Ohm	14121
R424	Resistor,chip603		150 Ohm	14151
R425	Resistor,chip603		470 Ohm	14471
R426	Resistor,chip603		12 Ohm	14120
R427	Resistor,chip603		470 Ohm	14471
R428	Resistor,chip603		470 Ohm	14471
R429	Resistor,chip603		47 Ohm	14470
R430	Resistor,chip603		10 Ohm	14100
R431	Resistor,chip603		10 Ohm	14100
R432	Resistor,chip603		2,2 Kohm	14222
R433	Resistor,chip603		4,7 Kohm	14472
R434	Resistor,chip603	S_25	Not used	
	Resistor,chip603	S_12	Not used	
	Resistor,chip603	S_SW	100 Kohm	14104
	Resistor,chip603	D_25	Not used	
	Resistor,chip603	D_12	Not used	
	Resistor,chip603	D_SW	100 Kohm	14104
	Resistor,chip603	SB_25	Not used	
	Resistor,chip603	SB_12	Not used	
	Resistor,chip603	SB_SW	100 Kohm	14104
R435	Resistor,chip603	S_25	Not used	
	Resistor,chip603	S_12	Not used	
	Resistor,chip603	S_SW	100 Kohm	14104
	Resistor,chip603	D_25	Not used	
	Resistor,chip603	D_12	Not used	
	Resistor,chip603	D_SW	100 Kohm	14104
	Resistor,chip603	SB_25	Not used	
	Resistor,chip603	SB_12	Not used	
	Resistor,chip603	SB_SW	100 Kohm	14104
R436	Resistor,chip603	S_25	820 Ohm	14821
	Resistor,chip603	S_12	Not used	
	Resistor,chip603	S_SW	Not used	
	Resistor,chip603	D_25	820 Ohm	14821
	Resistor,chip603	D_12	Not used	
	Resistor,chip603	D_SW	Not used	
	Resistor,chip603	SB_25	820 Ohm	14821
	Resistor,chip603	SB_12	Not used	
	Resistor,chip603	SB_SW	Not used	

p. 8 of 31 PC. Board No. 776-8

Copyright © 2004

Partlist for Radioboard TRX3001C/TRDX3001C Date 1-8-03
Drawing No. 0-3006-03-7 Unit No. 3002

Component	Description	Value	Niros No.
R437	Resistor,chip603 S_25	Not used	
	Resistor,chip603 S_12	330 Ohm	14331
	Resistor,chip603 S_SW	Not used	
	Resistor,chip603 D_25	Not used	
	Resistor,chip603 D_12	330 Ohm	14331
	Resistor,chip603 D_SW	Not used	
	Resistor,chip603 SB_25	Not used	
	Resistor,chip603 SB_12	330 Ohm	14331
	Resistor,chip603 SB_SW	Not used	
R501	Resistor,ptc	0,5 A	83364
R502	Resistor,chip603	15 Kohm	14153
R503	Resistor,chip1206	390 Ohm	12391
R504	Resistor,chip1206	390 Ohm	12391
R505	Resistor,chip603	100 Kohm	14104
R506	Resistor,chip603	68 Kohm	14683
R507	Resistor,chip603	150 Kohm	14154
R508	Resistor,chip603	390 Kohm	14394
R509	Resistor,chip603	1 Mohm	14105
R510	Resistor,chip603	680 Ohm	14681
R511	Resistor,chip603_1%	1 Kohm	10926
R512	Resistor,chip603_1%	4,53 Kohm	10927
R513	Resistor,chip603	47 Ohm	14470
R514	Resistor,chip603 S_25	Not used	
	Resistor,chip603 S_12	Not used	
	Resistor,chip603 S_SW	470 Ohm	14471
	Resistor,chip603 D_25	Not used	
	Resistor,chip603 D_12	Not used	
	Resistor,chip603 D_SW	470 Ohm	14471
	Resistor,chip603 SB_25	Not used	
	Resistor,chip603 SB_12	Not used	
	Resistor,chip603 SB_SW	470 Ohm	14471
R515	Resistor,chip603 S_25	Not used	
	Resistor,chip603 S_12	Not used	
	Resistor,chip603 S_SW	6,8 Kohm	14682
	Resistor,chip603 D_25	Not used	
	Resistor,chip603 D_12	Not used	
	Resistor,chip603 D_SW	6,8 Kohm	14682
	Resistor,chip603 SB_25	Not used	
	Resistor,chip603 SB_12	Not used	
	Resistor,chip603 SB_SW	6,8 Kohm	14682
R516	Resistor,chip603 S_25	Not used	
	Resistor,chip603 S_12	Not used	
	Resistor,chip603 S_SW	6,8 Kohm	14682
	Resistor,chip603 D_25	Not used	
	Resistor,chip603 D_12	Not used	
	Resistor,chip603 D_SW	6,8 Kohm	14682
	Resistor,chip603 SB_25	Not used	
	Resistor,chip603 SB_12	Not used	

p. 9 of 31 PC. Board No. 776-8

Copyright © 2004

Partlist for Radioboard TRX3001C/TRDX3001C Date 1-8-03
Drawing No. 0-3006-03-7 Unit No. 3002

Component	Description	Value	Niros No.
	Resistor,chip603 SB_SW	6,8 Kohm	14682
R517	Resistor,chip603 S_25	Not used	
	Resistor,chip603 S_12	Not used	
	Resistor,chip603 S_SW	6,8 Kohm	14682
	Resistor,chip603 D_25	Not used	
	Resistor,chip603 D_12	Not used	
	Resistor,chip603 D_SW	6,8 Kohm	14682
	Resistor,chip603 SB_25	Not used	
	Resistor,chip603 SB_12	Not used	
	Resistor,chip603 SB_SW	6,8 Kohm	14682
R518	Resistor,chip603 S_25	Not used	
	Resistor,chip603 S_12	Not used	
	Resistor,chip603 S_SW	6,8 Kohm	14682
	Resistor,chip603 D_25	Not used	
	Resistor,chip603 D_12	Not used	
	Resistor,chip603 D_SW	6,8 Kohm	14682
	Resistor,chip603 SB_25	Not used	
	Resistor,chip603 SB_12	Not used	
	Resistor,chip603 SB_SW	6,8 Kohm	14682
R519	Resistor,chip603 S_25	Not used	
	Resistor,chip603 S_12	Not used	
	Resistor,chip603 S_SW	6,8 Kohm	14682
	Resistor,chip603 D_25	Not used	
	Resistor,chip603 D_12	Not used	
	Resistor,chip603 D_SW	6,8 Kohm	14682
	Resistor,chip603 SB_25	Not used	
	Resistor,chip603 SB_12	Not used	
	Resistor,chip603 SB_SW	6,8 Kohm	14682
R520	Resistor,chip603 S_25	Not used	
	Resistor,chip603 S_12	Not used	
	Resistor,chip603 S_SW	470 Ohm	14471
	Resistor,chip603 D_25	Not used	
	Resistor,chip603 D_12	Not used	
	Resistor,chip603 D_SW	470 Ohm	14471
	Resistor,chip603 SB_25	Not used	
	Resistor,chip603 SB_12	Not used	
	Resistor,chip603 SB_SW	470 Ohm	14471
R521	Resistor,chip603 S_25	Not used	
	Resistor,chip603 S_12	Not used	
	Resistor,chip603 S_SW	6,8 Kohm	14682
	Resistor,chip603 D_25	Not used	
	Resistor,chip603 D_12	Not used	
	Resistor,chip603 D_SW	6,8 Kohm	14682
	Resistor,chip603 SB_25	Not used	
	Resistor,chip603 SB_12	Not used	
	Resistor,chip603 SB_SW	6,8 Kohm	14682
R522	Resistor,chip603	22 Kohm	14223
R523	Resistor,chip603	47 Ohm	14470

p. 10 of 31 PC. Board No. 776-8

Copyright © 2004

Partlist for Radioboard TRX3001C/TRDX3001C Date 1-8-03
Drawing No. 0-3006-03-7 Unit No. 3002

Component	Description		Value	Niros No.
R524	Resistor,chip603		2,2 Kohm	14222
R525	Resistor,chip603		4,7 Kohm	14472
R526	Resistor,chip603		2,2 Kohm	14222
R527	Resistor,chip603		470 Kohm	14474
R528	Resistor,chip603		15 Kohm	14153
R529	Resistor,chip603		1 Mohm	14105
R530	Resistor,chip603		390 Kohm	14394
R531	Resistor,chip603		2,2 Kohm	14222
R532	Resistor,chip603	S_25	6,8 Kohm	14682
	Resistor,chip603	S_12	3,3 Kohm	14332
	Resistor,chip603	S_SW	6,8 Kohm	14682
	Resistor,chip603	D_25	6,8 Kohm	14682
	Resistor,chip603	D_12	3,3 Kohm	14332
	Resistor,chip603	D_SW	6,8 Kohm	14682
	Resistor,chip603	SB_25	6,8 Kohm	14682
	Resistor,chip603	SB_12	3,3 Kohm	14332
	Resistor,chip603	SB_SW	6,8 Kohm	14682
R533	Resistor,chip603	S_25	Not used	
	Resistor,chip603	S_12	Not used	
	Resistor,chip603	S_SW	6,8 Kohm	14682
	Resistor,chip603	D_25	Not used	
	Resistor,chip603	D_12	Not used	
	Resistor,chip603	D_SW	6,8 Kohm	14682
	Resistor,chip603	SB_25	Not used	
	Resistor,chip603	SB_12	Not used	
	Resistor,chip603	SB_SW	6,8 Kohm	14682
R534	Resistor,chip603		47 Kohm	14473
R535	Resistor,chip603		1 Mohm	14105
R536	Resistor,chip603		820 Kohm	14824
R537	Resistor,chip603		10 Kohm	14103
R538	Resistor,chip603		10 Kohm	14103
R539	Resistor,chip805		10 Mohm	13106
R540	Resistor,chip603		1,5 Mohm	14155
R541	Resistor,chip603		820 Kohm	14824
R542	Resistor,chip603		1 Mohm	14105
R543	Resistor,chip603		180 Kohm	14184
R544	Resistor,chip603	S_25	0 Ohm	14000
	Resistor,chip603	S_12	0 Ohm	14000
	Resistor,chip603	S_SW	0 Ohm	14000
	Resistor,chip603	D_25	Not used	
	Resistor,chip603	D_12	Not used	
	Resistor,chip603	D_SW	Not used	
	Resistor,chip603	SB_25	Not used	
	Resistor,chip603	SB_12	Not used	
	Resistor,chip603	SB_SW	Not used	
C101	Capacitor,chip603		10 nF	21103

p. 11 of 31 PC. Board No. 776-8

Copyright © 2004

Partlist for Radioboard TRX3001C/TRDX3001C Date 1-8-03
Drawing No. 0-3006-03-7 Unit No. 3002

Component	Description	Value	Niros No.
C102	Capacitor,chip603	10 pF	21100
C103	Capacitor,chip603	10 nF	21103
C104	Capacitor,chip603	10 nF	21103
C105	Capacitor,chip603	10 nF	21103
C106	Capacitor,chip603	1 nF	21102
C107	Capacitor,chip603	1 nF	21102
C108	Capacitor,chip603	18 pF	21180
C109	Capacitor,chip603	10 nF	21103
C110	Capacitor,chip603	120 pF	21121
C111	Capacitor,chip603	6,8 pF	21689
C112	Capacitor,ctan_e	22 uF/35V	25624
C113	Capacitor,chip603	4,7 nF	21472
C114	Capacitor,chip603	1 nF	21102
C115	Capacitor,chip603 S_25	1 nF	21102
	Capacitor,chip603 S_12	1 nF	21102
	Capacitor,chip603 S_SW	1 nF	21102
	Capacitor,chip603 D_25	Not used	
	Capacitor,chip603 D_12	Not used	
	Capacitor,chip603 D_SW	Not used	
	Capacitor,chip603 SB_25	1 nF	21102
	Capacitor,chip603 SB_12	1 nF	21102
	Capacitor,chip603 SB_SW	1 nF	21102
C116	Capacitor,chip603	4,7 nF	21472
C117	Capacitor,ctan_e	22 uF/35V	25624
C118	Capacitor,chip603	1 nF	21102
C119	Capacitor,chip603	2,2 pF	21229
C120	Capacitor,chip603 S_25	1 nF	21102
	Capacitor,chip603 S_12	1 nF	21102
	Capacitor,chip603 S_SW	1 nF	21102
	Capacitor,chip603 D_25	Not used	
	Capacitor,chip603 D_12	Not used	
	Capacitor,chip603 D_SW	Not used	
	Capacitor,chip603 SB_25	1 nF	21102
	Capacitor,chip603 SB_12	1 nF	21102
	Capacitor,chip603 SB_SW	1 nF	21102
C121	Capacitor,chip603 S_25	1 nF	21102
	Capacitor,chip603 S_12	1 nF	21102
	Capacitor,chip603 S_SW	1 nF	21102
	Capacitor,chip603 D_25	Not used	
	Capacitor,chip603 D_12	Not used	
	Capacitor,chip603 D_SW	Not used	
	Capacitor,chip603 SB_25	1 nF	21102
	Capacitor,chip603 SB_12	1 nF	21102
	Capacitor,chip603 SB_SW	1 nF	21102
C122	Capacitor,chip603_pwr	8,2 pF	20829
C123	Capacitor,chip603	0,68 pF	21688
C124	Capacitor,chip805_pwr	18 pF	20830
C125	Capacitor,chip603_pwr	4,7 pF	20828

p. 12 of 31 PC. Board No. 776-8

Copyright © 2004

Partlist for Radioboard TRX3001C/TRDX3001C Date 1-8-03
Drawing No. 0-3006-03-7 Unit No. 3002

Component	Description	Value	Niros No.
C126	Capacitor,chip805_pwr	18 pF	20830
C127	Capacitor,chip603_pwr	3,3 pF	20827
C128	Capacitor,chip603_pwr	8,2 pF	20829
C129	Capacitor,chip603	1 nF	21102
C130	Capacitor,chip603	1 nF	21102
C131	Capacitor,chip603	1 nF	21102
C132	Capacitor,chip603	2,2 nF	21222
C133	Capacitor,chip603	47 nF	21473
C134	Capacitor,chip603_ln	4,7 nF	20803
C135	Capacitor,chip1206	330 nF	20664
C136	Capacitor,chip603	47 nF	21473
C137	Capacitor,ctan_a	6,8 uF/10V	25619
C138	Capacitor,chip1206	330 nF	20664
C139	Capacitor,ctan_c	10 uF/25V	25623
C140	Capacitor,chip1206	330 nF	20664
C141	Capacitor,ctan_c	10 uF/25V	25623
C142	Capacitor,chip603	100 pF	21101
C143	Capacitot,lyt	330 uF/25V	26027
C144	Capacitot,lyt	330 uF/25V	26027
C145	Capacitor,chip603	2,2 pF	21229
C146	Capacitor,chip603 S_25	1 nF	21102
	Capacitor,chip603 S_12	1 nF	21102
	Capacitor,chip603 S_SW	1 nF	21102
	Capacitor,chip603 D_25	Not used	
	Capacitor,chip603 D_12	Not used	
	Capacitor,chip603 D_SW	Not used	
	Capacitor,chip603 SB_25	1 nF	21102
	Capacitor,chip603 SB_12	1 nF	21102
	Capacitor,chip603 SB_SW	1 nF	21102
C147	Capacitor,chip603	1 nF	21102
C148	Capacitor,chip603	1 nF	21102
C149	Capacitor,chip603	1 nF	21102
C150	Capacitor,chip603	2,2 pF	21229
C151	Capacitor,chip603	330 pF	21331
C152	Capacitor,chip603	1 nF	21102
C153	Capacitor,chip1206	330 nF	20664
C154	Capacitor,chip603	10 nF	21103
C155	Capacitor,chip603	1 nF	21102
C156	Capacitor,chip603	100 pF	21101
C201	Capacitor,chip603	1 nF	21102
C203	Capacitor,chip603_ln	4,7 nF	20803
C204	Capacitor,chip603	0,5 pF	21508
C205	Capacitor,chip603_ln	470 pF	20860
C206	Capacitor,chip603_2%	3,3 pF	22339
C207	Capacitor,chip603	27 pF	21270

p. 13 of 31 PC. Board No. 776-8

Copyright © 2004

Partlist for Radioboard TRX3001C/TRDX3001C Date 1-8-03
Drawing No. 0-3006-03-7 Unit No. 3002

Component	Description	Value	Niros No.
C208	Capacitor,chip603_2%	1 pF	22109
C209	Capacitor,chip603_2%	5,6 pF	22569
C210	Capacitor,chip603_n750	15 pF	20808
C211	Capacitor,ctan_a	2,2 uF/16V	25613
C212	Capacitor,chip603	1 pF	21109
C213	Capacitor,chip603_n750	8,2 pF	20807
C214	Capacitor,chip603_n750	8,2 pF	20807
C215	Capacitor,chip603_ln	4,7 nF	20803
C216	Capacitor,ctan_a	6,8 uF/10V	25619
C217	Capacitor,chip603	10 nF	21103
C218	Capacitor,chip603	27 pF	21270
C219	Capacitor,chip603	39 pF	21390
C220	Capacitor,chip603	10 nF	21103
C221	Capacitor,chip603_2%	22 pF	22220
C222	Capacitor,chip603	10 nF	21103
C223	Capacitor,chip603	10 nF	21103
C224	Capacitor,chip603	1 nF	21102
C225	Capacitor,chip603	10 nF	21103
C226	Capacitor,chip603	10 nF	21103
C227	Capacitor,chip603	1 nF	21102
C228	Capacitor,chip603	1 nF	21102
C230	Capacitor,chip603	47 nF	21473
C232	Capacitor,chip603	220 pF	21221
C234	Capacitor,ctan_a	1 uF/20V	25617
C235	Capacitor,chip603_ln	Not used	
C236	Capacitor,chip603_ln	Not used	
C237	Capacitor,chip603_ln	Not used	
C238	Capacitor,chip1206_ln	47 nF	20805
C239	Capacitor,chip2824	470 nF	20823
C240	Capacitor,chip1206_ln	47 nF	20805
C241	Capacitor,ctan_e	Not used	
C242	Capacitor,ctan_a	6,8 uF/10V	25619
C243	Capacitor,chip603	1 nF	21102
C244	Capacitor,chip805	330 nF	20662
C245	Capacitor,ctan_a	6,8 uF/10V	25619
C246	Capacitor,chip603	10 nF	21103
C247	Capacitor,chip603	10 nF	21103
C249	Capacitor,chip603	10 nF	21103
C250	Capacitor,chip603	100 pF	21101
C251	Capacitor,chip603	220 pF	21221
C252	Capacitor,chip603	220 pF	21221
C253	Capacitor,chip603	220 pF	21221
C254	Capacitor,chip603	10 nF	21103
C255	Capacitor,chip603	10 nF	21103
C256	Capacitor,chip1206_ln	3,9 nF	20861

p. 14 of 31 PC. Board No. 776-8

Copyright © 2004

Partlist for Radioboard TRX3001C/TRDX3001C Date 1-8-03
Drawing No. 0-3006-03-7 Unit No. 3002

Component	Description	Value	Niros No.
C257	Capacitor,chip603	100 pF	21101
C258	Capacitor,chip603	Not used	
C301	Capacitor,chip603_ln	Not used	
C302	Capacitor,chip603_ln	Not used	
C303	Capacitor,chip603_ln	Not used	
C304	Capacitor,chip603	10 nF	21103
C305	Capacitor,chip1206_ln	3,9 nF	20861
C306	Capacitor,chip1206_ln	39 nF	20838
C307	Capacitor,ctan_a	6,8 uF/10V	25619
C308	Capacitor,chip603	1 nF	21102
C309	Capacitor,chip805	330 nF	20662
C310	Capacitor,ctan_a	6,8 uF/10V	25619
C311	Capacitor,chip603	10 nF	21103
C312	Capacitor,chip603	1 nF	21102
C313	Capacitor,chip603	10 nF	21103
C315	Capacitor,chip603	100 pF	21101
C317	Capacitor,chip603	Not used	
C318	Capacitor,chip603	Not used	
C319	Capacitor,chip603	220 pF	21221
C320	Capacitor,chip603	Not used	
C321	Capacitor,chip603	Not used	
C322	Capacitor,chip603	Not used	
C323	Capacitor,chip603	47 nF	21473
C324	Capacitor,chip603	47 nF	21473
C325	Capacitor,chip603	Not used	
C326	Capacitor,chip603	Not used	
C327	Capacitor,chip603	Not used	
C328	Capacitor,chip603	Not used	
C329	Capacitor,chip805	100 nF	20654
C330	Capacitor,chip603	Not used	
C331	Capacitor,chip603	33 pF	21330
C332	Capacitor,chip603	22 pF	21220
C333	Capacitor,chip603	47 pF	21470
C334	Capacitor,chip603	Selected	
C335	Capacitor,chip603	150 pF	21151
C336	Capacitor,chip603	150 pF	21151
C337	Capacitor,chip603	47 pF	21470
C338	Capacitor,chip603	1 nF	21102
C339	Capacitor,chip603	10 nF	21103
C340	Capacitor,chip603	1 nF	21102
C341	Capacitor,chip603	1 nF	21102
C342	Capacitor,chip603_ln	4,7 nF	20803
C343	Capacitor,ctan_a	6,8 uF/10V	25619
C344	Capacitor,chip603_n750	4,7 pF	20806
C345	Capacitor,chip603_n750	8,2 pF	20807

p. 15 of 31 PC. Board No. 776-8

Copyright © 2004

Partlist for Radioboard TRX3001C/TRDX3001C Date 1-8-03
Drawing No. 0-3006-03-7 Unit No. 3002

Component	Description	Value	Niros No.
C346	Capacitor,chip603	0,5 pF	21508
C347	Capacitor,ctan_a	2,2 uF/16V	25613
C348	Capacitor,chip603	10 nF	21103
C349	Capacitor,chip603_n750	15 pF	20808
C350	Capacitor,chip603_2%	1 pF	22109
C351	Capacitor,chip603	Selected	
C352	Capacitor,chip603_2%	2,4 pF	22249
C353	Capacitor,chip603_2%	12 pF	22120
C354	Capacitor,chip603_ln	470 pF	20860
C355	Capacitor,ctan_a	6,8 uF/10V	25619
C356	Capacitor,ctan_a	6,8 uF/10V	25619
C357	Capacitor,chip603	220 pF	21221
C358	Capacitor,ctan_a	6,8 uF/10V	25619
C359	Capacitor,ctan_a	2,2 uF/16V	25613
C360	Capacitor,chip1206_ln	3,9 nF	20861
C361	Capacitor,chip603	100 pF	21101
C362	Capacitor,chip603	82 pF	21820
C363	Capacitor,chip805 S_25	330 nF	20662
	Capacitor,chip805 S_12	330 nF	20662
	Capacitor,chip805 S_SW	330 nF	20662
	Capacitor,chip805 D_25	Not used	
	Capacitor,chip805 D_12	Not used	
	Capacitor,chip805 D_SW	Not used	
	Capacitor,chip805 SB_25	330 nF	20662
	Capacitor,chip805 SB_12	330 nF	20662
	Capacitor,chip805 SB_SW	330 nF	20662
C364	Capacitor,chip603 S_25	22 pF	21220
	Capacitor,chip603 S_12	22 pF	21220
	Capacitor,chip603 S_SW	22 pF	21220
	Capacitor,chip603 D_25	Not used	
	Capacitor,chip603 D_12	Not used	
	Capacitor,chip603 D_SW	Not used	
	Capacitor,chip603 SB_25	22 pF	21220
	Capacitor,chip603 SB_12	22 pF	21220
	Capacitor,chip603 SB_SW	22 pF	21220
C365	Capacitor,chip603 S_25	22 pF	21220
	Capacitor,chip603 S_12	22 pF	21220
	Capacitor,chip603 S_SW	22 pF	21220
	Capacitor,chip603 D_25	Not used	
	Capacitor,chip603 D_12	Not used	
	Capacitor,chip603 D_SW	Not used	
	Capacitor,chip603 SB_25	22 pF	21220
	Capacitor,chip603 SB_12	22 pF	21220
	Capacitor,chip603 SB_SW	22 pF	21220
C366	Capacitor,chip805 S_25	330 nF	20662
	Capacitor,chip805 S_12	330 nF	20662
	Capacitor,chip805 S_SW	330 nF	20662

p. 16 of 31 PC. Board No. 776-8

Copyright © 2004

Partlist for Radioboard TRX3001C/TRDX3001C Date 1-8-03
Drawing No. 0-3006-03-7 Unit No. 3002

Component	Description	Value	Niros No.
	Capacitor,chip805 D_25	Not used	
	Capacitor,chip805 D_12	Not used	
	Capacitor,chip805 D_SW	Not used	
	Capacitor,chip805 SB_25	330 nF	20662
	Capacitor,chip805 SB_12	330 nF	20662
	Capacitor,chip805 SB_SW	330 nF	20662
C367	Capacitor,chip805 S_25	330 nF	20662
	Capacitor,chip805 S_12	330 nF	20662
	Capacitor,chip805 S_SW	330 nF	20662
	Capacitor,chip805 D_25	Not used	
	Capacitor,chip805 D_12	Not used	
	Capacitor,chip805 D_SW	Not used	
	Capacitor,chip805 SB_25	330 nF	20662
	Capacitor,chip805 SB_12	330 nF	20662
	Capacitor,chip805 SB_SW	330 nF	20662
C401	Capacitor,chip603_2%	1 pF	22109
C402	Capacitor,chip603	10 nF	21103
C403	Capacitor,chip603_2%	8,2 pF	22829
C404	Capacitor,chip603_2%	0,5 pF	22508
C405	Capacitor,chip603_2%	1 pF	22109
C406	Capacitor,chip603_2%	8,2 pF	22829
C407	Capacitor,chip603_2%	1 pF	22109
C408	Capacitor,chip603	1 nF	21102
C409	Capacitor,chip603	10 nF	21103
C410	Capacitor,chip603	1 nF	21102
C411	Capacitor,chip603_2%	15 pF	22150
C412	Capacitor,chip603_2%	3,3 pF	22339
C413	Capacitor,chip603_2%	10 pF	22100
C414	Capacitor,chip603_2%	0,39 pF	22398
C415	Capacitor,chip603_2%	1 pF	22109
C416	Capacitor,chip603_2%	10 pF	22100
C417	Capacitor,chip603	10 nF	21103
C418	Capacitor,chip603_2%	3,3 pF	22339
C419	Capacitor,chip603	10 nF	21103
C420	Capacitor,chip603 S_25	10 nF	21103
	Capacitor,chip603 S_12	Not used	
	Capacitor,chip603 S_SW	Not used	
	Capacitor,chip603 D_25	10 nF	21103
	Capacitor,chip603 D_12	Not used	
	Capacitor,chip603 D_SW	Not used	
	Capacitor,chip603 SB_25	10 nF	21103
	Capacitor,chip603 SB_12	Not used	
	Capacitor,chip603 SB_SW	Not used	
C421	Capacitor,chip603 S_25	Not used	
	Capacitor,chip603 S_12	10 nF	21103
	Capacitor,chip603 S_SW	Not used	
	Capacitor,chip603 D_25	Not used	

p. 17 of 31 PC. Board No. 776-8

Copyright © 2004

Partlist for Radioboard TRX3001C/TRDX3001C Date 1-8-03
Drawing No. 0-3006-03-7 Unit No. 3002

Component	Description	Value	Niros No.
	Capacitor,chip603 D_12	10 nF	21103
	Capacitor,chip603 D_SW	Not used	
	Capacitor,chip603 SB_25	Not used	
	Capacitor,chip603 SB_12	10 nF	21103
	Capacitor,chip603 SB_SW	Not used	
C422	Capacitor,chip603 S_25	Not used	
	Capacitor,chip603 S_12	Not used	
	Capacitor,chip603 S_SW	10 nF	21103
	Capacitor,chip603 D_25	Not used	
	Capacitor,chip603 D_12	Not used	
	Capacitor,chip603 D_SW	10 nF	21103
	Capacitor,chip603 SB_25	Not used	
	Capacitor,chip603 SB_12	Not used	
	Capacitor,chip603 SB_SW	10 nF	21103
C423	Capacitor,chip603 S_25	Not used	
	Capacitor,chip603 S_12	Not used	
	Capacitor,chip603 S_SW	10 nF	21103
	Capacitor,chip603 D_25	Not used	
	Capacitor,chip603 D_12	Not used	
	Capacitor,chip603 D_SW	10 nF	21103
	Capacitor,chip603 SB_25	Not used	
	Capacitor,chip603 SB_12	Not used	
	Capacitor,chip603 SB_SW	10 nF	21103
C424	Capacitor,chip603 S_25	Not used	
	Capacitor,chip603 S_12	Not used	
	Capacitor,chip603 S_SW	10 nF	21103
	Capacitor,chip603 D_25	Not used	
	Capacitor,chip603 D_12	Not used	
	Capacitor,chip603 D_SW	10 nF	21103
	Capacitor,chip603 SB_25	Not used	
	Capacitor,chip603 SB_12	Not used	
	Capacitor,chip603 SB_SW	10 nF	21103
C425	Capacitor,chip603 S_25	Not used	
	Capacitor,chip603 S_12	6,8 pF	21689
	Capacitor,chip603 S_SW	6,8 pF	21689
	Capacitor,chip603 D_25	Not used	
	Capacitor,chip603 D_12	6,8 pF	21689
	Capacitor,chip603 D_SW	6,8 pF	21689
	Capacitor,chip603 SB_25	Not used	
	Capacitor,chip603 SB_12	6,8 pF	21689
	Capacitor,chip603 SB_SW	6,8 pF	21689
C426	Capacitor,chip603 S_25	Not used	
	Capacitor,chip603 S_12	Not used	
	Capacitor,chip603 S_SW	10 nF	21103
	Capacitor,chip603 D_25	Not used	
	Capacitor,chip603 D_12	Not used	
	Capacitor,chip603 D_SW	10 nF	21103
	Capacitor,chip603 SB_25	Not used	

Copyright © 2004

Partlist for Radioboard TRX3001C/TRDX3001C Date 1-8-03
Drawing No. 0-3006-03-7 Unit No. 3002

Component	Description	Value	Niros No.
	Capacitor,chip603 SB_12	Not used	
	Capacitor,chip603 SB_SW	10 nF	21103
C427	Capacitor,chip603 S_25	8,2 pF	21829
	Capacitor,chip603 S_12	Not used	
	Capacitor,chip603 S_SW	8,2 pF	21829
	Capacitor,chip603 D_25	8,2 pF	21829
	Capacitor,chip603 D_12	Not used	
	Capacitor,chip603 D_SW	8,2 pF	21829
	Capacitor,chip603 SB_25	8,2 pF	21829
	Capacitor,chip603 SB_12	Not used	
	Capacitor,chip603 SB_SW	8,2 pF	21829
C428	Capacitor,chip603 S_25	Not used	
	Capacitor,chip603 S_12	18 pF	21180
	Capacitor,chip603 S_SW	18 pF	21180
	Capacitor,chip603 D_25	Not used	
	Capacitor,chip603 D_12	18 pF	21180
	Capacitor,chip603 D_SW	18 pF	21180
	Capacitor,chip603 SB_25	Not used	
	Capacitor,chip603 SB_12	18 pF	21180
	Capacitor,chip603 SB_SW	18 pF	21180
C429	Capacitor,chip603 S_25	Not used	
	Capacitor,chip603 S_12	6,8 pF	21689
	Capacitor,chip603 S_SW	6,8 pF	21689
	Capacitor,chip603 D_25	Not used	
	Capacitor,chip603 D_12	6,8 pF	21689
	Capacitor,chip603 D_SW	6,8 pF	21689
	Capacitor,chip603 SB_25	Not used	
	Capacitor,chip603 SB_12	6,8 pF	21689
	Capacitor,chip603 SB_SW	6,8 pF	21689
C430	Capacitor,chip603 S_25	Not used	
	Capacitor,chip603 S_12	Not used	
	Capacitor,chip603 S_SW	10 nF	21103
	Capacitor,chip603 D_25	Not used	
	Capacitor,chip603 D_12	Not used	
	Capacitor,chip603 D_SW	10 nF	21103
	Capacitor,chip603 SB_25	Not used	
	Capacitor,chip603 SB_12	Not used	
	Capacitor,chip603 SB_SW	10 nF	21103
C431	Capacitor,chip603 S_25	Not used	
	Capacitor,chip603 S_12	Not used	
	Capacitor,chip603 S_SW	10 nF	21103
	Capacitor,chip603 D_25	Not used	
	Capacitor,chip603 D_12	Not used	
	Capacitor,chip603 D_SW	10 nF	21103
	Capacitor,chip603 SB_25	Not used	
	Capacitor,chip603 SB_12	Not used	
	Capacitor,chip603 SB_SW	10 nF	21103
C432	Capacitor,chip603 S_25	10 nF	21103

Copyright © 2004

Partlist for Radioboard TRX3001C/TRDX3001C Date 1-8-03
Drawing No. 0-3006-03-7 Unit No. 3002

Component	Description	Value	Niros No.
	Capacitor,chip603 S_12	Not used	
	Capacitor,chip603 S_SW	Not used	
	Capacitor,chip603 D_25	10 nF	21103
	Capacitor,chip603 D_12	Not used	
	Capacitor,chip603 D_SW	Not used	
	Capacitor,chip603 SB_25	10 nF	21103
	Capacitor,chip603 SB_12	Not used	
	Capacitor,chip603 SB_SW	Not used	
C433	Capacitor,chip603 S_25	Not used	
	Capacitor,chip603 S_12	10 nF	21103
	Capacitor,chip603 S_SW	Not used	
	Capacitor,chip603 D_25	Not used	
	Capacitor,chip603 D_12	10 nF	21103
	Capacitor,chip603 D_SW	Not used	
	Capacitor,chip603 SB_25	Not used	
	Capacitor,chip603 SB_12	10 nF	21103
	Capacitor,chip603 SB_SW	Not used	
C434	Capacitor,chip603	3,9 pF	21399
C435	Capacitor,chip603	10 nF	21103
C436	Capacitor,chip603	1 nF	21102
C437	Capacitor,chip603	100 pF	21101
C438	Capacitor,chip603	18 pF	21180
C439	Capacitor,chip603	6,8 pF	21689
C440	Capacitor,chip603	10 nF	21103
C441	Capacitor,chip603	10 nF	21103
C442	Capacitor,chip603	1 nF	21102
C443	Capacitor,chip603	10 nF	21103
C444	Capacitor,chip603	4,7 pF	21479
C445	Capacitor,chip603	Not used	
C446	Capacitor,chip603	39 pF	21390
C447	Capacitor,chip603	Not used	
C448	Capacitor,chip603	Not used	
C449	Capacitor,chip603	Not used	
C501	Capacitor,chip603	10 nF	21103
C502	Capacitor,chip603	10 nF	21103
C503	Capacitor,chip603	10 nF	21103
C504	Capacitor,chip603	10 nF	21103
C505	Capacitor,chip603	10 nF	21103
C506	Capacitot,lyt	330 uF/25V	26027
C507	Capacitor,chip603	10 nF	21103
C508	Capacitor,chip603	10 nF	21103
C509	Capacitor,chip1206	330 nF	20664
C510	Capacitor,ctan_a	6,8 uF/10V	25619
C511	Capacitor,chip805	100 nF	20654
C512	Capacitor,ctan_a	6,8 uF/10V	25619
C513	Capacitor,chip603	1 nF	21102

p. 20 of 31 PC. Board No. 776-8

Copyright © 2004

Partlist for Radioboard TRX3001C/TRDX3001C Date 1-8-03
Drawing No. 0-3006-03-7 Unit No. 3002

Component	Description	Value	Niros No.
C514	Capacitor,ctan_a	6,8 uF/10V	25619
C515	Capacitor,chip603	10 nF	21103
C516	Capacitor,chip603	1 nF	21102
C517	Capacitor,chip603	1 nF	21102
C518	Capacitor,chip603 S_25	Not used	
	Capacitor,chip603 S_12	Not used	
	Capacitor,chip603 S_SW	47 nF	21473
	Capacitor,chip603 D_25	Not used	
	Capacitor,chip603 D_12	Not used	
	Capacitor,chip603 D_SW	47 nF	21473
	Capacitor,chip603 SB_25	Not used	
	Capacitor,chip603 SB_12	Not used	
	Capacitor,chip603 SB_SW	47 nF	21473
C519	Capacitor,chip603	47 nF	21473
C520	Capacitor,chip603 S_25	47 nF	21473
	Capacitor,chip603 S_12	47 nF	21473
	Capacitor,chip603 S_SW	Not used	
	Capacitor,chip603 D_25	47 nF	21473
	Capacitor,chip603 D_12	47 nF	21473
	Capacitor,chip603 D_SW	Not used	
	Capacitor,chip603 SB_25	47 nF	21473
	Capacitor,chip603 SB_12	47 nF	21473
	Capacitor,chip603 SB_SW	Not used	
C521	Capacitor,chip603 S_25	Not used	
	Capacitor,chip603 S_12	Not used	
	Capacitor,chip603 S_SW	47 nF	21473
	Capacitor,chip603 D_25	Not used	
	Capacitor,chip603 D_12	Not used	
	Capacitor,chip603 D_SW	47 nF	21473
	Capacitor,chip603 SB_25	Not used	
	Capacitor,chip603 SB_12	Not used	
	Capacitor,chip603 SB_SW	47 nF	21473
C522	Capacitor,chip603 S_25	Not used	
	Capacitor,chip603 S_12	Not used	
	Capacitor,chip603 S_SW	47 nF	21473
	Capacitor,chip603 D_25	Not used	
	Capacitor,chip603 D_12	Not used	
	Capacitor,chip603 D_SW	47 nF	21473
	Capacitor,chip603 SB_25	Not used	
	Capacitor,chip603 SB_12	Not used	
	Capacitor,chip603 SB_SW	47 nF	21473
C523	Capacitor,chip603 S_25	47 nF	21473
	Capacitor,chip603 S_12	47 nF	21473
	Capacitor,chip603 S_SW	Not used	
	Capacitor,chip603 D_25	47 nF	21473
	Capacitor,chip603 D_12	47 nF	21473
	Capacitor,chip603 D_SW	Not used	
	Capacitor,chip603 SB_25	47 nF	21473
	Capacitor,chip603 SB_12	47 nF	21473

p. 21 of 31 PC. Board No. 776-8

Copyright © 2004

Partlist for Radioboard TRX3001C/TRDX3001C Date 1-8-03
Drawing No. 0-3006-03-7 Unit No. 3002

Component	Description		Value	Niros No.
	Capacitor,chip603	SB_SW	Not used	
C524	Capacitor,chip603		47 nF	21473
C525	Capacitor,chip603	S_25	Not used	
	Capacitor,chip603	S_12	Not used	
	Capacitor,chip603	S_SW	47 nF	21473
	Capacitor,chip603	D_25	Not used	
	Capacitor,chip603	D_12	Not used	
	Capacitor,chip603	D_SW	47 nF	21473
	Capacitor,chip603	SB_25	Not used	
	Capacitor,chip603	SB_12	Not used	
	Capacitor,chip603	SB_SW	47 nF	21473
C526	Capacitor,chip805		100 nF	20654
C527	Capacitor,chip805		100 nF	20654
C528	Capacitor,ctan_a		2,2 uF/16V	25613
C529	Capacitor,chip805		100 nF	20654
C530	Capacitor,chip805		100 nF	20654
C531	Capacitor,chip805		100 nF	20654
C532	Capacitor,chip603		10 nF	21103
C533	Capacitor,chip603		2,2 nF	21222
C534	Capacitor,chip603		1 nF	21102
C535	Capacitor,chip603		180 pF	21181
C536	Capacitor,chip603		180 pF	21181
C537	Capacitor,chip603		100 pF	21101
C538	Capacitor,chip603		10 nF	21103
C539	Capacitor,ctan_a		2,2 uF/16V	25613
C540	Capacitor,chip603		10 nF	21103
C541	Capacitor,chip603		10 nF	21103
C542	Capacitor,chip603		10 nF	21103
C543	Capacitor,chip603		10 nF	21103
C544	Capacitor,chip603		22 nF	21223
C545	Capacitor,chip603		10 nF	21103
C546	Capacitor,chip603		1 nF	21102
C547	Capacitor,chip603		1 nF	21102
F101	Filter		4N7	75906
F102	Filter		4N7	75906
F401-402	Crystal-filter	S_25	25KHZ	30023
	Crystal-filter	S_12	Not used	
	Crystal-filter	S_SW	25KHZ	30023
	Crystal-filter	D_25	25KHZ	30023
	Crystal-filter	D_12	Not used	
	Crystal-filter	D_SW	25KHZ	30023
	Crystal-filter	SB_25	25KHZ	30023
	Crystal-filter	SB_12	Not used	
	Crystal-filter	SB_SW	25KHZ	30023
F403-404	Crystal-filter	S_25	Not used	

Copyright © 2004

Partlist for Radioboard TRX3001C/TRDX3001C Date 1-8-03
Drawing No. 0-3006-03-7 Unit No. 3002

Component	Description		Value	Niros No.
	Crystal-filter	S_12	12.5KHZ	30024
	Crystal-filter	S_SW	12.5KHZ	30024
	Crystal-filter	D_25	Not used	
	Crystal-filter	D_12	12.5KHZ	30024
	Crystal-filter	D_SW	12.5KHZ	30024
	Crystal-filter	SB_25	Not used	
	Crystal-filter	SB_12	12.5KHZ	30024
	Crystal-filter	SB_SW	12.5KHZ	30024
F501	Filter		4N7	75906
F502	Filter		4N7	75906
F503	Filter		4N7	75906
F504	Ceramic-filter	S_25	CFWC450E	30066
	Ceramic-filter	S_12	CFWC450G	30067
	Ceramic-filter	S_SW	CFWC450E	30066
	Ceramic-filter	D_25	CFWC450E	30066
	Ceramic-filter	D_12	CFWC450G	30067
	Ceramic-filter	D_SW	CFWC450E	30066
	Ceramic-filter	SB_25	CFWC450E	30066
	Ceramic-filter	SB_12	CFWC450G	30067
	Ceramic-filter	SB_SW	CFWC450E	30066
F505	Ceramic-filter	S_25	Not used	
	Ceramic-filter	S_12	Not used	
	Ceramic-filter	S_SW	CFWC450G	30067
	Ceramic-filter	D_25	Not used	
	Ceramic-filter	D_12	Not used	
	Ceramic-filter	D_SW	CFWC450G	30067
	Ceramic-filter	SB_25	Not used	
	Ceramic-filter	SB_12	Not used	
	Ceramic-filter	SB_SW	CFWC450G	30067
F506	Filter		4N7	75906
F507	Filter		4N7	75906
X301	Vtcxo		Not used	
X302	Crystal		14.85 MHz	31204
T101	Transistor		BFS540	40206
T102	Transistor		BCW61D	40157
T103	Transistor		BCW61D	40157
T104	Transistor		BFG35	40207
T105	Transistor	S_25	BCW61D	40157
	Transistor	S_12	BCW61D	40157
	Transistor	S_SW	BCW61D	40157
	Transistor	D_25	Not used	
	Transistor	D_12	Not used	
	Transistor	D_SW	Not used	
	Transistor	SB_25	BCW61D	40157
	Transistor	SB_12	BCW61D	40157
	Transistor	SB_SW	BCW61D	40157

p. 23 of 31 PC. Board No. 776-8

Copyright © 2004

Partlist for Radioboard TRX3001C/TRDX3001C Date 1-8-03
Drawing No. 0-3006-03-7 Unit No. 3002

Component	Description		Value	Niros No.
T106	Transistor		BCW60D	40156
T108	Transistor		SI4953DY	40202
T110	Transistor	S_25	DTA144EUA	40208
	Transistor	S_12	DTA144EUA	40208
	Transistor	S_SW	DTA144EUA	40208
	Transistor	D_25	Not used	
	Transistor	D_12	Not used	
	Transistor	D_SW	Not used	
	Transistor	SB_25	DTA144EUA	40208
	Transistor	SB_12	DTA144EUA	40208
	Transistor	SB_SW	DTA144EUA	40208
T111	Transistor	S_25	DTC144EUA	40209
	Transistor	S_12	DTC144EUA	40209
	Transistor	S_SW	DTC144EUA	40209
	Transistor	D_25	Not used	
	Transistor	D_12	Not used	
	Transistor	D_SW	Not used	
	Transistor	SB_25	DTC144EUA	40209
	Transistor	SB_12	DTC144EUA	40209
	Transistor	SB_SW	DTC144EUA	40209
T201	Transistor		SST310	40175
T202	Transistor		BFR92A	40150
T204	Transistor		BFS540	40206
T205	Transistor		DTA123JUA	40210
T206	Transistor		DTC144EUA	40209
T207	Transistor		BFR92A	40150
T208	Transistor		Not used	
T209	Transistor		BCW61D	40157
T210	Transistor		DTC144EUA	40209
T211	Transistor		BCW60D	40156
T301	Transistor		BCW61D	40157
T302	Transistor		DTC144EUA	40209
T303	Transistor		BFR92A	40150
T304	Transistor		BFR92A	40150
T305	Transistor		BFR92A	40150
T306	Transistor		SST310	40175
T401	Transistor		BFR505	40205
T402	Transistor	S_25	Not used	
	Transistor	S_12	Not used	
	Transistor	S_SW	DTC144EUA	40209
	Transistor	D_25	Not used	
	Transistor	D_12	Not used	
	Transistor	D_SW	DTC144EUA	40209
	Transistor	SB_25	Not used	
	Transistor	SB_12	Not used	
	Transistor	SB_SW	DTC144EUA	40209
T403	Transistor	S_25	Not used	

p. 24 of 31 PC. Board No. 776-8

Copyright © 2004

Partlist for Radioboard TRX3001C/TRDX3001C Date 1-8-03
Drawing No. 0-3006-03-7 Unit No. 3002

Component	Description		Value	Niros No.
	Transistor	S_12	Not used	
	Transistor	S_SW	DTC144EUA	40209
	Transistor	D_25	Not used	
	Transistor	D_12	Not used	
	Transistor	D_SW	DTC144EUA	40209
	Transistor	SB_25	Not used	
	Transistor	SB_12	Not used	
	Transistor	SB_SW	DTC144EUA	40209
T404	Transistor	S_25	Not used	
	Transistor	S_12	Not used	
	Transistor	S_SW	DTC114YUA	40211
	Transistor	D_25	Not used	
	Transistor	D_12	Not used	
	Transistor	D_SW	DTC114YUA	40211
	Transistor	SB_25	Not used	
	Transistor	SB_12	Not used	
	Transistor	SB_SW	DTC114YUA	40211
T405	Transistor		SST310	40175
T406	Transistor		BFS540	40206
T501	Transistor		FCX720	40201
T502	Transistor		DTC114YUA	40211
T503	Transistor		DTC144EUA	40209
T504	Transistor		BF990A	40187
T505	Transistor		BFR92A	40150
T506	Transistor		DTA123JUA	40210
T507	Transistor		DTC144EUA	40209
T508	Transistor		BCW61D	40157
T509	Transistor	S_25	Not used	
	Transistor	S_12	Not used	
	Transistor	S_SW	DTA144EUA	40208
	Transistor	D_25	Not used	
	Transistor	D_12	Not used	
	Transistor	D_SW	DTA144EUA	40208
	Transistor	SB_25	Not used	
	Transistor	SB_12	Not used	
	Transistor	SB_SW	DTA144EUA	40208
D101	Diode	S_25	MA4P1250	45171
	Diode	S_12	MA4P1250	45171
	Diode	S_SW	MA4P1250	45171
	Diode	D_25	0 Ohm	12000
	Diode	D_12	0 Ohm	12000
	Diode	D_SW	0 Ohm	12000
	Diode	SB_25	MA4P1250	45171
	Diode	SB_12	MA4P1250	45171
	Diode	SB_SW	MA4P1250	45171
D102	Diode	S_25	MA4P1250	45171

p. 25 of 31 PC. Board No. 776-8

Copyright © 2004

Partlist for Radioboard TRX3001C/TRDX3001C Date 1-8-03
Drawing No. 0-3006-03-7 Unit No. 3002

Component	Description		Value	Niros No.
	Diode	S_12	MA4P1250	45171
	Diode	S_SW	MA4P1250	45171
	Diode	D_25	Not used	
	Diode	D_12	Not used	
	Diode	D_SW	Not used	
	Diode	SB_25	MA4P1250	45171
	Diode	SB_12	MA4P1250	45171
	Diode	SB_SW	MA4P1250	45171
D103	Diode	S_25	BA682	45152
	Diode	S_12	BA682	45152
	Diode	S_SW	BA682	45152
	Diode	D_25	Not used	
	Diode	D_12	Not used	
	Diode	D_SW	Not used	
	Diode	SB_25	BA682	45152
	Diode	SB_12	BA682	45152
	Diode	SB_SW	BA682	45152
D104	Diode		BAS70-04	45197
D105	Diode,zener		BZX84C5V6	41241
D201	Diode,kap		BB134	45196
D202	Diode,kap		BB133	45195
D203	Diode		BAT17-04	45172
D301	Diode		Not used	
D302	Diode,kap		Not used	
D303	Diode,kap		BB133	45195
D304	Diode		BAT17-04	45172
D305	Diode,kap		BB133	45195
D306	Diode		BAT54S	45173
D307	Diode	S_25	BAT54S	45173
	Diode	S_12	BAT54S	45173
	Diode	S_SW	BAT54S	45173
	Diode	D_25	Not used	
	Diode	D_12	Not used	
	Diode	D_SW	Not used	
	Diode	SB_25	BAT54S	45173
	Diode	SB_12	BAT54S	45173
	Diode	SB_SW	BAT54S	45173
D401	Diode,kap		BB133	45195
D402	Diode,kap		BB133	45195
D403	Diode,kap		BB133	45195
D404	Diode,kap		BB133	45195
D405	Diode	S_25	Not used	
	Diode	S_12	Not used	
	Diode	S_SW	BA682	45152
	Diode	D_25	Not used	
	Diode	D_12	Not used	
	Diode	D_SW	BA682	45152
	Diode	SB_25	Not used	

p. 26 of 31 PC. Board No. 776-8

Copyright © 2004

Partlist for Radioboard TRX3001C/TRDX3001C Date 1-8-03
Drawing No. 0-3006-03-7 Unit No. 3002

Component	Description	Value	Niros No.
	Diode SB_12	Not used	
	Diode SB_SW	BA682	45152
D406	Diode S_25	Not used	
	Diode S_12	Not used	
	Diode S_SW	BA682	45152
	Diode D_25	Not used	
	Diode D_12	Not used	
	Diode D_SW	BA682	45152
	Diode SB_25	Not used	
	Diode SB_12	Not used	
	Diode SB_SW	BA682	45152
D407	Diode S_25	Not used	
	Diode S_12	Not used	
	Diode S_SW	BA682	45152
	Diode D_25	Not used	
	Diode D_12	Not used	
	Diode D_SW	BA682	45152
	Diode SB_25	Not used	
	Diode SB_12	Not used	
	Diode SB_SW	BA682	45152
D408	Diode S_25	Not used	
	Diode S_12	Not used	
	Diode S_SW	BA682	45152
	Diode D_25	Not used	
	Diode D_12	Not used	
	Diode D_SW	BA682	45152
	Diode SB_25	Not used	
	Diode SB_12	Not used	
	Diode SB_SW	BA682	45152
D409	Diode S_25	Not used	
	Diode S_12	Not used	
	Diode S_SW	BA682	45152
	Diode D_25	Not used	
	Diode D_12	Not used	
	Diode D_SW	BA682	45152
	Diode SB_25	Not used	
	Diode SB_12	Not used	
	Diode SB_SW	BA682	45152
D410	Diode	HSMS-2827	45201
D501	Diode,transient	SMCJ16A	41249
D502	Diode	BYD17D	45176
D503	Diode S_25	Not used	
	Diode S_12	Not used	
	Diode S_SW	BA682	45152
	Diode D_25	Not used	
	Diode D_12	Not used	
	Diode D_SW	BA682	45152
	Diode SB_25	Not used	
	Diode SB_12	Not used	

p. 27 of 31 PC. Board No. 776-8

Copyright © 2004

Partlist for Radioboard TRX3001C/TRDX3001C Date 1-8-03
Drawing No. 0-3006-03-7 Unit No. 3002

Component	Description		Value	Niros No.
	Diode	SB_SW	BA682	45152
D504	Diode	S_25	Not used	
	Diode	S_12	Not used	
	Diode	S_SW	BA682	45152
	Diode	D_25	Not used	
	Diode	D_12	Not used	
	Diode	D_SW	BA682	45152
	Diode	SB_25	Not used	
	Diode	SB_12	Not used	
	Diode	SB_SW	BA682	45152
D505	Diode	S_25	Not used	
	Diode	S_12	Not used	
	Diode	S_SW	BA682	45152
	Diode	D_25	Not used	
	Diode	D_12	Not used	
	Diode	D_SW	BA682	45152
	Diode	SB_25	Not used	
	Diode	SB_12	Not used	
	Diode	SB_SW	BA682	45152
D506	Diode	S_25	Not used	
	Diode	S_12	Not used	
	Diode	S_SW	BA682	45152
	Diode	D_25	Not used	
	Diode	D_12	Not used	
	Diode	D_SW	BA682	45152
	Diode	SB_25	Not used	
	Diode	SB_12	Not used	
	Diode	SB_SW	BA682	45152
D507	Diode		BAV99	45148
IC101	Integrated_circuit		RA30H1317M	46625
IC102	Integrated_circuit		TDA2003V	46538
IC103	Integrated_circuit		MIC29152BT	46539
IC201	Integrated_circuit		PIC16CE624	46621
IC202	Integrated_circuit	S_25	Not used	
	Integrated_circuit	S_12	Not used	
	Integrated_circuit	S_SW	TC4S66F	46250
	Integrated_circuit	D_25	Not used	
	Integrated_circuit	D_12	Not used	
	Integrated_circuit	D_SW	TC4S66F	46250
	Integrated_circuit	SB_25	Not used	
	Integrated_circuit	SB_12	Not used	
	Integrated_circuit	SB_SW	TC4S66F	46250
IC203	Integrated_circuit		AD822AR	46552
IC204	Integrated_circuit		Not used	
IC205	Integrated_circuit		Not used	
IC206	Integrated_circuit		LMX2306TM	46547
IC207	Integrated_circuit		TC4S66F	46250

p. 28 of 31 PC. Board No. 776-8

Copyright © 2004

Partlist for Radioboard TRX3001C/TRDX3001C Date 1-8-03
Drawing No. 0-3006-03-7 Unit No. 3002

Component	Description	Value	Niros No.
IC301	Integrated_circuit	LMX2306TM	46547
IC302	Integrated_circuit	Not used	
IC303	Integrated_circuit	40106BT	46116
IC501	Integrated_circuit	LM317D	46525
IC502	Integrated_circuit	MC3371	46247
IC503	Integrated_circuit	LPC662	46244
TR401	Trafo	75946	75946
TR402	Trafo	75946	75946
L101	Coil,chip	75949	75949
L102	Coil,chip	75877	75877
L103	Coil,chip1206	75938	75938
L104	Coil,chip1806	75941	75941
L105	Coil,chip S_25	75922	75922
	Coil,chip S_12	75922	75922
	Coil,chip S_SW	75922	75922
	Coil,chip D_25	Not used	
	Coil,chip D_12	Not used	
	Coil,chip D_SW	Not used	
	Coil,chip SB_25	75922	75922
	Coil,chip SB_12	75922	75922
	Coil,chip SB_SW	75922	75922
L106	Coil,chip	75922	75922
L107	Coil	75955	75955
L108	Coil	75955	75955
L109	Coil	75955	75955
L110	Coil,chip1206	75938	75938
L111	Coil,chip1206	75938	75938
L201	Coil,chip	75842	75842
L202	Coil	75919	75919
L203	Coil,chip	75922	75922
L204	Coil,chip	75949	75949
L205	Coil,chip	75883	75883
L206	Coil,chip	75883	75883
L301	Coil_chip	76008	76008
L302	Coil,chip	75922	75922
L303	Coil,chip	75948	75948
L304	Coil	75923	75923
L305	Coil,chip	75922	75922
L307	Coil,chip	75883	75883
L401	Coil	75950	75950
L402	Coil	75952	75952
L403	Coil	75950	75950
L404	Coil	75952	75952

p. 29 of 31 PC. Board No. 776-8

Copyright © 2004

Partlist for Radioboard TRX3001C/TRDX3001C Date 1-8-03
Drawing No. 0-3006-03-7 Unit No. 3002

Component	Description		Value	Niros No.
L405	Coil,chip		75877	75877
L406	Coil		75951	75951
L407	Coil		75953	75953
L408	Coil		75951	75951
L409	Coil		75953	75953
L410	Coil_chip		76008	76008
L411	Coil,chip		75879	75879
L412	Coil,chip		75949	75949
L413	Coil	S_25	Not used	
	Coil	S_12	Not used	
	Coil	S_SW	Not used	
	Resistor,chip805	D_25	0 Ohm	13000
	Resistor,chip805	D_12	0 Ohm	13000
	Resistor,chip805	D_SW	0 Ohm	13000
	Coil	SB_25	Not used	
	Coil	SB_12	Not used	
	Coil	SB_SW	Not used	
L501	Coil,chip		75883	75883
L502	Coil,chip		75883	75883
L503	Coil,chip1206		75938	75938
L504	Coil,chip1206		75938	75938
L505	Coil		75901	75901
L506	Coil,chip		75883	75883
FUSE1	Fuse		Not used	
FUSE2	Fuse		Not used	
FUSE3	Fuse		12A	83374
J1	Antenna_connector			83365
J2	Connector_25pol			83366
J3	Conector_2x3pin			83363
V1	Resistor,chip1206	S_25	1 Kohm	12102
	Resistor,chip1206	S_12	2,2 Kohm	12222
	Resistor,chip1206	S_SW	4,7 Kohm	12472
	Resistor,chip1206	D_25	10 Kohm	12103
	Resistor,chip1206	D_12	22 Kohm	12223
	Resistor,chip1206	D_SW	47 Kohm	12473
	Resistor,chip1206	SB_25	820 Ohm	12821
	Resistor,chip1206	SB_12	8,2 Kohm	12822
	Resistor,chip1206	SB_SW	82 Kohm	12823
V2	Resistor,chip1206	S_25	1 Kohm	12102
	Resistor,chip1206	S_12	2,2 Kohm	12222
	Resistor,chip1206	S_SW	4,7 Kohm	12472
	Resistor,chip1206	D_25	10 Kohm	12103
	Resistor,chip1206	D_12	22 Kohm	12223

p. 30 of 31 PC. Board No. 776-8

Copyright © 2004

Partlist for Radioboard TRX3001C/TRDX3001C Date 1-8-03
Drawing No. 0-3006-03-7 Unit No. 3002

Component	Description	Value	Niros No.
	Resistor,chip1206 D_SW	47 Kohm	12473
	Resistor,chip1206 SB_25	820 Ohm	12821
	Resistor,chip1206 SB_12	8,2 Kohm	12822
	Resistor,chip1206 SB_SW	82 Kohm	12823
	Rx_coaxcable S_25	0 pcs	
	Rx_coaxcable S_12	0 pcs	
	Rx_coaxcable S_SW	0 pcs	
	Rx_coaxcable D_25	1 pcs	83397
	Rx_coaxcable D_12	1 pcs	83397
	Rx_coaxcable D_SW	1 pcs	83397
	Rx_coaxcable SB_25	0 pcs	
	Rx_coaxcable SB_12	0 pcs	
	Rx_coaxcable SB_SW	0 pcs	
	Lpf_shield S_25	0 pcs	
	Lpf_shield S_12	0 pcs	
	Lpf_shield S_SW	0 pcs	
	Lpf_shield D_25	1 pcs	98204
	Lpf_shield D_12	1 pcs	98204
	Lpf_shield D_SW	1 pcs	98204
	Lpf_shield SB_25	1 pcs	98204
	Lpf_shield SB_12	1 pcs	98204
	Lpf_shield SB_SW	1 pcs	98204
	Lpf_shield_lid S_25	0 pcs	
	Lpf_shield_lid S_12	0 pcs	
	Lpf_shield_lid S_SW	0 pcs	
	Lpf_shield_lid D_25	1 pcs	98205
	Lpf_shield_lid D_12	1 pcs	98205
	Lpf_shield_lid D_SW	1 pcs	98205
	Lpf_shield_lid SB_25	1 pcs	98205
	Lpf_shield_lid SB_12	1 pcs	98205
	Lpf_shield_lid SB_SW	1 pcs	98205
	Pc_board_no. 776-8	1 pcs	95776
	Vco_shield	2 pcs	98162
	Vco_lid S_25	1 pcs	98163
	Vco_lid S_12	1 pcs	98163
	Vco_lid S_SW	1 pcs	98163
	Vco_lid D_25	2 pcs	98163
	Vco_lid D_12	2 pcs	98163
	Vco_lid D_SW	2 pcs	98163
	Vco_lid SB_25	2 pcs	98163
	Vco_lid SB_12	2 pcs	98163
	Vco_lid SB_SW	2 pcs	98163
	Rx_front-shield	1 pcs	98206
	Rx_front-shield_lid	1 pcs	98207

p. 31 of 31 PC. Board No. 776-8

Copyright © 2004

12. Radioboard TRX3001D

Copyright © 2004

12.1 Diagram

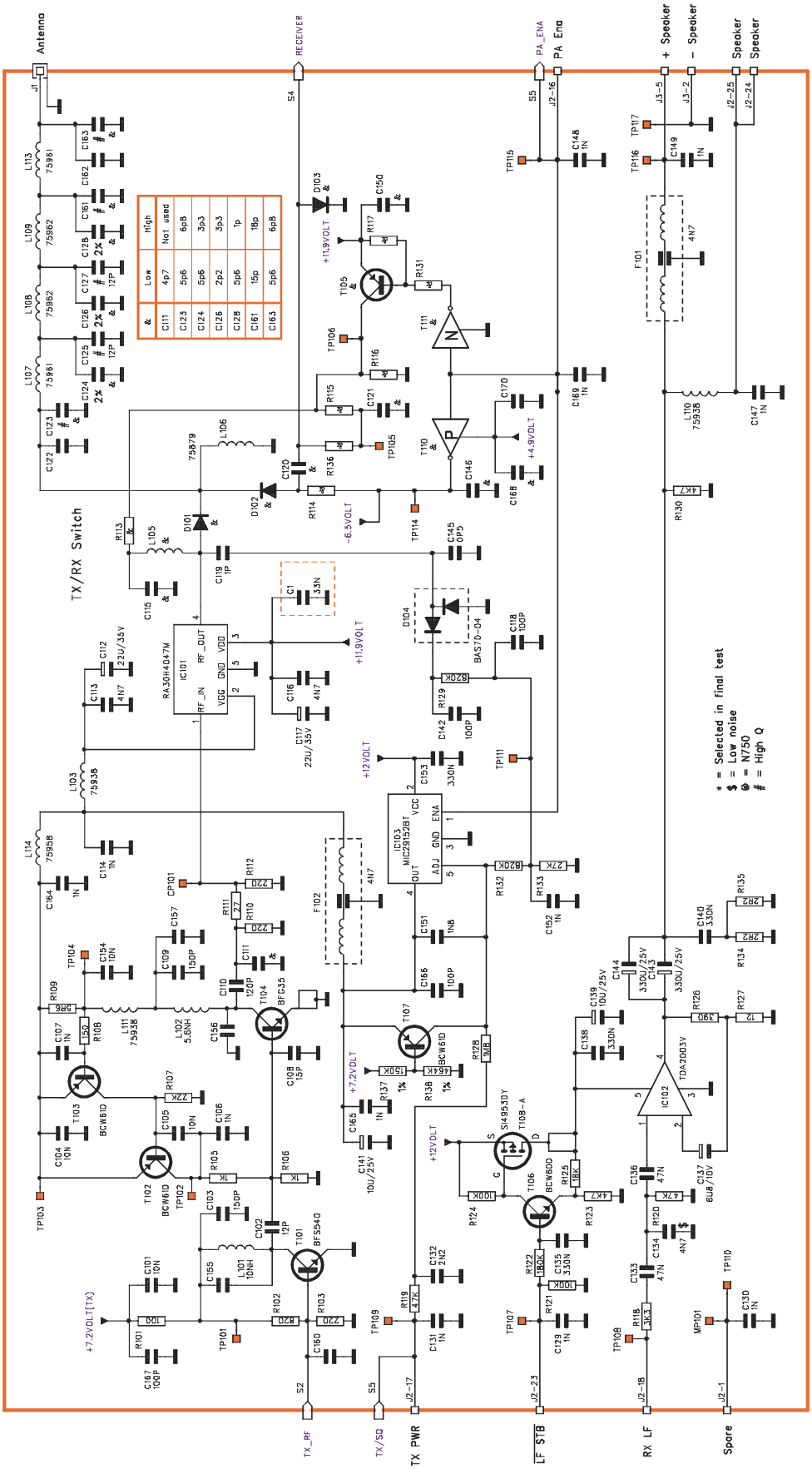

&	Simplex	Duplex
R113	270	Not used
R114	1K	Not used
R115	220	Not used
R116	10K	Not used
R117	10K	Not used
R131	10K	Not used
R136	1K8	Not used
C115	1n	Not used
C120	1n	Not used
C121	1n	Not used
C146	1n	Not used
C150	100p	Not used
C168	1n	Not used
T105	BCW61D	Not used
T110	DTA144EUA	Not used
T111	DTC144EUA	Not used
D101	MA4P1250	0 Ohm
D102	MA4P7001F	Not used
D103	BAB91	Not used
L105	75879	Not used

&	High	Not used	6p8	3p3	3p3	1p	18p	6p8
Low	4p7	5p6	5p6	2p2	5p6	15p	5p6	
&	C111	C123	C124	C126	C128	C161	C163	

		SIMPLEX	DUPLEX	SIMPLEX BASE
25KHz	Low	Unit No.: 3000	Unit No.: 3200	Unit No.: 3300
25KHz	High	Unit No.: 3001	Unit No.: 3201	Unit No.: 3301
12,5KHz	Low	Unit No.: 3010	Unit No.: 3210	Unit No.: 3310
12,5KHz	High	Unit No.: 3011	Unit No.: 3211	Unit No.: 3311
12,5/25KHz	Low	Unit No.: 3015	Unit No.: 3215	Unit No.: 3315
12,5/25KHz	High	Unit No.: 3016	Unit No.: 3216	Unit No.: 3316

SUBJECT TO CHANGE WITHOUT NOTICE

Date: 14-01-2003 Sign: HEK	7	NIROS TELECOMMUNICATION A/S Hirsemarken 5, 3520 Farum	Radioboard TRX3001D/TRDX3001D
Date: 08-03-2006 Sign: HK	8		
Drawing No.: 0-3008-03-8 p 1 of 5		PC. Board No.: 790-7	

Copyright © 2004

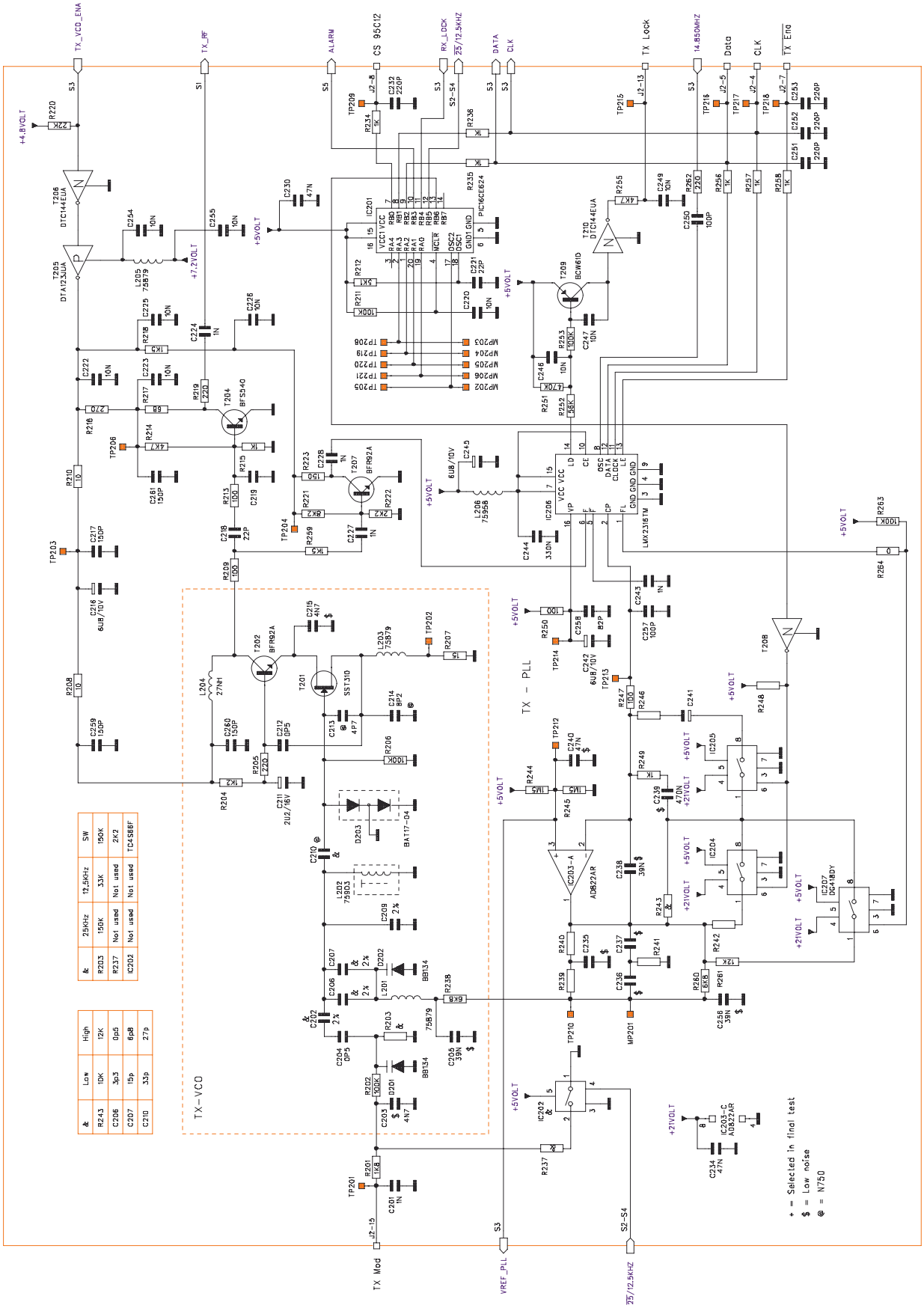

	&	25KHz	12.5KHz	SW
	R203	Not used	33K	150K
	R237	Not used	Not used	2K2
	IC202	Not used	Not used	TC4S66F

	&	Low	High
	R243	10K	12K
	C206	3p3	0p5
	C207	15p	6p8
	C210	33p	27p

	SIMPLEX	DUPLEX	SIMPLEX BASE
25KHz Low	Unit No.: 3000	Unit No.: 3200	Unit No.: 3300
25KHz High	Unit No.: 3001	Unit No.: 3201	Unit No.: 3301
12,5KHz Low	Unit No.: 3010	Unit No.: 3210	Unit No.: 3310
12,5KHz High	Unit No.: 3011	Unit No.: 3211	Unit No.: 3311
12,5/25KHz Low	Unit No.: 3015	Unit No.: 3215	Unit No.: 3315
12,5/25KHz High	Unit No.: 3016	Unit No.: 3216	Unit No.: 3316

SUBJECT TO CHANGE WITHOUT NOTICE

Date: 14-01-2003 Sign: HEK 7	NIROS TELECOMMUNICATION A/S Hirsemarken 5, 3520 Farum	Radioboard TRX3001D/TRDX3001D
Date: 08-03-2006 Sign: HK 8		
Drawing No.: 0-3008-03-8 p 2 of 5	PC. Board No.: 790-7	

File/Reference	Prepared	Date	Revised by	Revised date	Revision No.	Approved
Manual for TRX3001	TN	08-03-06	TN	08-03-2006	6	PA

Copyright © 2004

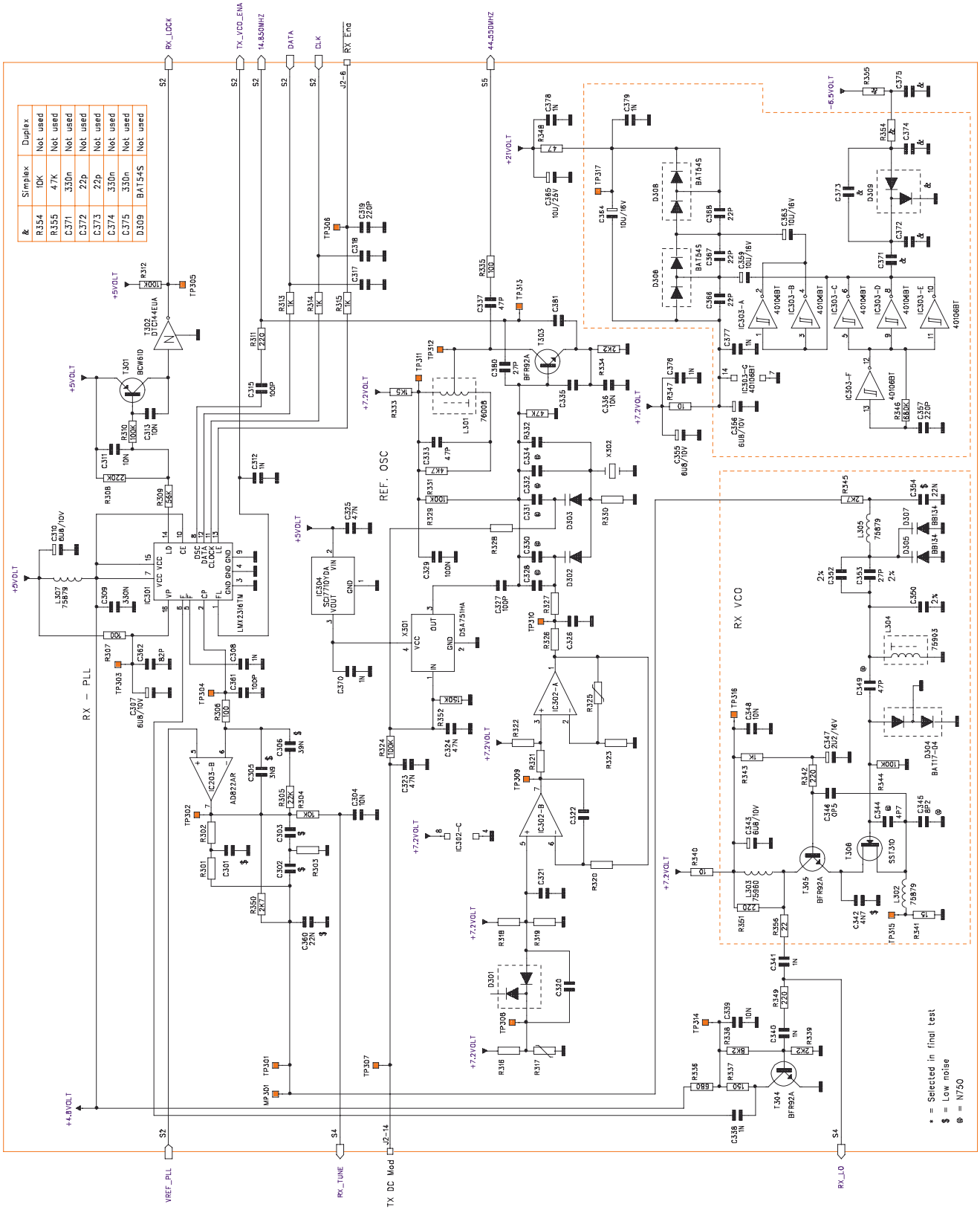

		SIMPLEX	DUPLEX	SIMPLEX BASE
25KHz	Low	Unit No.: 3000	Unit No.: 3200	Unit No.: 3300
25KHz	High	Unit No.: 3001	Unit No.: 3201	Unit No.: 3301
12,5KHz	Low	Unit No.: 3010	Unit No.: 3210	Unit No.: 3310
12,5KHz	High	Unit No.: 3011	Unit No.: 3211	Unit No.: 3311
12,5/25KHz	Low	Unit No.: 3015	Unit No.: 3215	Unit No.: 3315
12,5/25KHz	High	Unit No.: 3016	Unit No.: 3216	Unit No.: 3316

SUBJECT TO CHANGE WITHOUT NOTICE

Date: 14-01-2003 Sign: HEK	7	NIROS TELECOMMUNICATION A/S Hirsemarken 5, 3520 Farum	Radioboard TRX3001D/TRDX3001D
Date: 08-03-2006 Sign: HK	8		
Drawing No.: 0-3008-03-8 p 3 of 5		PC. Board No.: 790-7	

Copyright © 2004

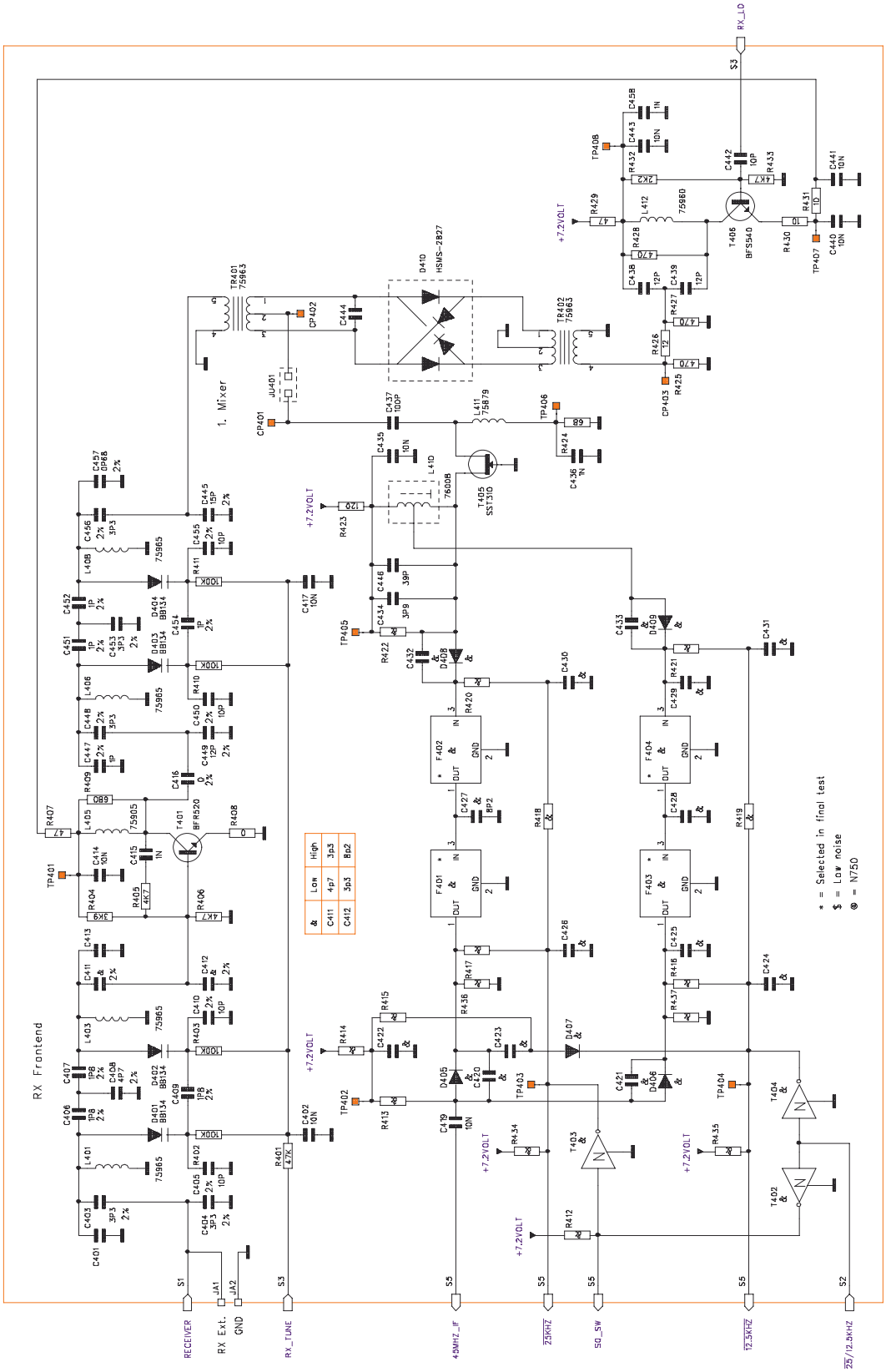

&	25KHz	12,5KHz	SW
R412	Not used	Not used	6K8
R413	Not used	Not used	2K2
R414	Not used	Not used	470
R415	Not used	Not used	4K7
R416	Not used	Not used	390
R417	Not used	Not used	1K8
R418	Not used	Not used	330
R419	Not used	Not used	1K5
R420	Not used	Not used	1K8
R421	Not used	Not used	680
R422	1K	1K5	10K
R434	Not used	Not used	100K
R435	Not used	Not used	100K
R436	820	Not used	Not used
R437	Not used	330	Not used
C420	10n	Not used	Not used
C421	Not used	10n	Not used
C422	Not used	Not used	10n
C423	Not used	Not used	10n
C424	Not used	Not used	10n
C425	Not used	6p8	6p8
C426	Not used	Not used	10n
C427	8p2	Not used	8p2
C428	Not used	18p	18p
C429	Not used	6p8	6p8
C430	Not used	Not used	10n
C431	Not used	Not used	10n
C432	10n	Not used	Not used
C433	Not used	10n	Not used
F401-402	25KHz	Not used	25KHz
F403-404	Not used	12,5KHz	12,5KHz
T402	Not used	Not used	DTC144EUA
T403	Not used	Not used	DTC144EUA
T404	Not used	Not used	DTC114YUA
D405	Not used	Not used	BA891
D406	Not used	Not used	BA891
D407	Not used	Not used	BA891
D408	Not used	Not used	BA891
D409	Not used	Not used	BA891

		SIMPLEX	DUPLEX	SIMPLEX BASE
25KHz	Low	Unit No.: 3000	Unit No.: 3200	Unit No.: 3300
25KHz	High	Unit No.: 3001	Unit No.: 3201	Unit No.: 3301
12,5KHz	Low	Unit No.: 3010	Unit No.: 3210	Unit No.: 3310
12,5KHz	High	Unit No.: 3011	Unit No.: 3211	Unit No.: 3311
12,5/25KHz	Low	Unit No.: 3015	Unit No.: 3215	Unit No.: 3315
12,5/25KHz	High	Unit No.: 3016	Unit No.: 3216	Unit No.: 3316

SUBJECT TO CHANGE WITHOUT NOTICE

Date: 14-01-2003 Sign: HEK	7	NIROS TELECOMMUNICATION A/S Hirsemarken 5, 3520 Farum
Date: 08-03-2006 Sign: HK	8	
Drawing No.: 0-3008-03-8 p 4 of 5		PC. Board No.: 790-7

Radioboard TRX3001D/TRDX3001D

Copyright © 2004

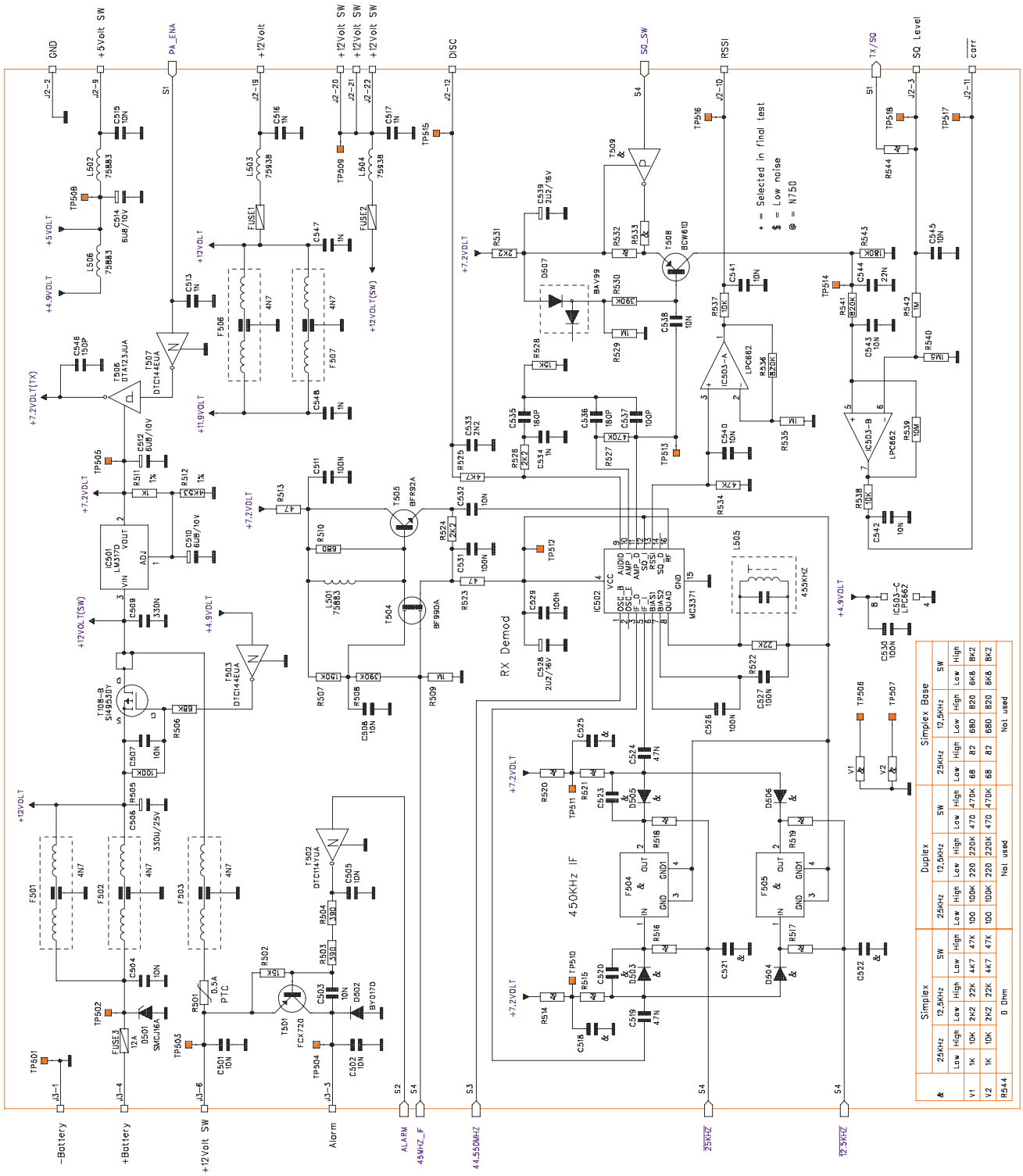

&	25KHz	12,5KHz	SW
R514	Not used	Not used	470
R515	Not used	Not used	8K8
R516	Not used	Not used	8K8
R517	Not used	Not used	8K8
R518	Not used	Not used	8K8
R519	Not used	Not used	8K8
R520	Not used	Not used	470
R521	Not used	Not used	8K8
R532	8K8	3K3	8K8
R533	Not used	Not used	1K8
C518	Not used	Not used	47n
C520	47n	47n	Not used
C521	Not used	Not used	47n
C522	Not used	Not used	47n
C523	47n	47n	Not used
C525	Not used	Not used	47n
F504	CFWC450E	CFWC450G	CFWC450E
F505	Not used	Not used	CFWC450G
T509	Not used	Not used	DTA144EUA
D503	Not used	Not used	BA891
D504	Not used	Not used	BA891
D505	Not used	Not used	BA891
D506	Not used	Not used	BA891

	SIMPLEX	DUPLEX	SIMPLEX BASE
25KHz	Low	Unit No.: 3000	Unit No.: 3200	Unit No.: 3300
25KHz	High	Unit No.: 3001	Unit No.: 3201	Unit No.: 3301
12,5KHz	Low	Unit No.: 3010	Unit No.: 3210	Unit No.: 3310
12,5KHz	High	Unit No.: 3011	Unit No.: 3211	Unit No.: 3311
12,5/25KHz	Low	Unit No.: 3015	Unit No.: 3215	Unit No.: 3315
12,5/25KHz	High	Unit No.: 3016	Unit No.: 3216	Unit No.: 3316

SUBJECT TO CHANGE WITHOUT NOTICE

Date: 14-01-2003 Sign: HEK	7	NIROS TELECOMMUNICATION A/S Hirsemarken 5, 3520 Farum	Radioboard TRX3001D/TRDX3001D
Date: 08-03-2006 Sign: HK	8		
Drawing No.: 0-3008-03-8 p 5 of 5		PC. Board No.: 790-7	

Copyright © 2004

12.2 Componentside

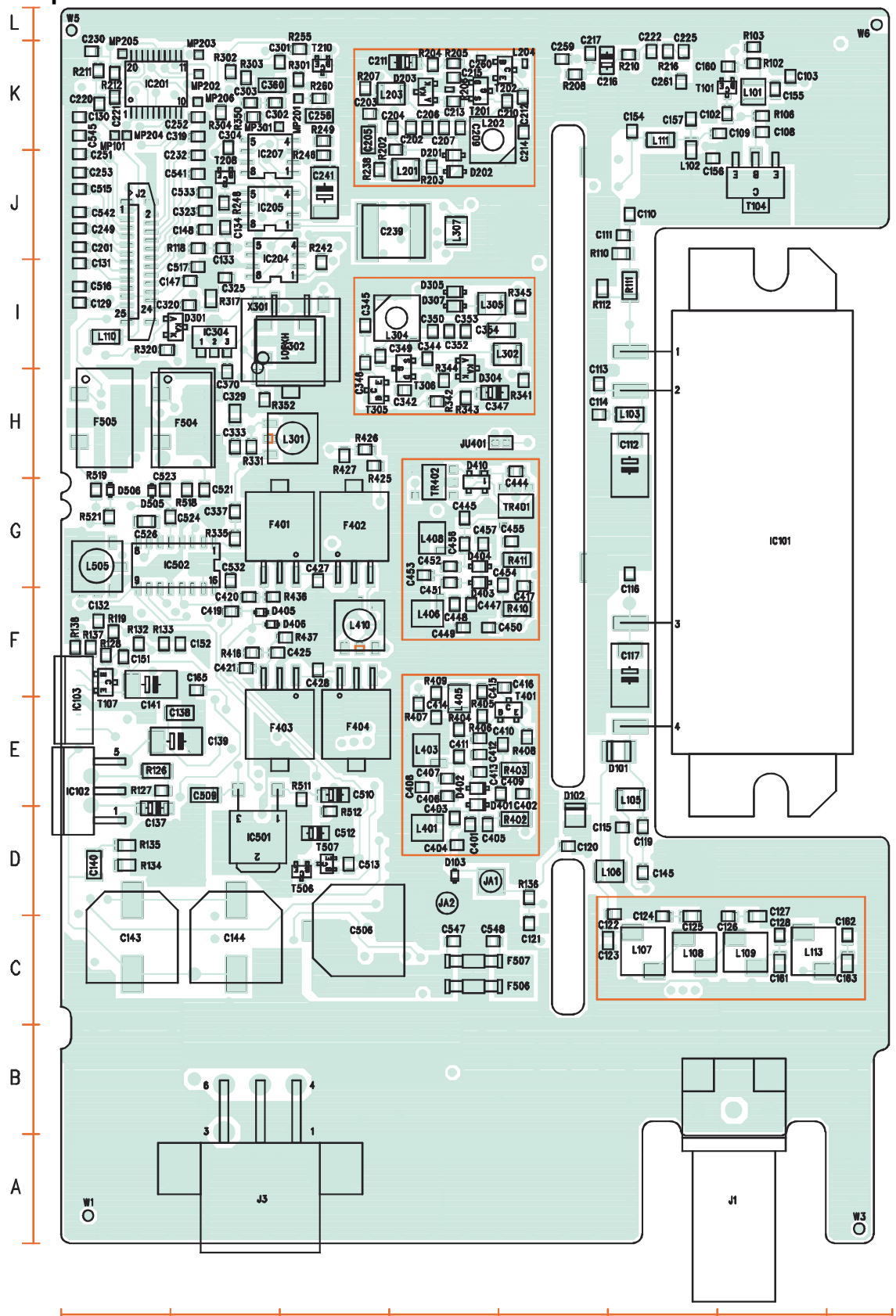

		SIMPLEX	DUPLEX	SIMPLEX BASE
25KHz	Low	Unit No.: 3000	Unit No.: 3200	Unit No.: 3300
25KHz	High	Unit No.: 3001	Unit No.: 3201	Unit No.: 3301
12,5KHz	Low	Unit No.: 3010	Unit No.: 3210	Unit No.: 3310
12,5KHz	High	Unit No.: 3011	Unit No.: 3211	Unit No.: 3311
12,5/25KHz	Low	Unit No.: 3015	Unit No.: 3215	Unit No.: 3315
12,5/25KHz	High	Unit No.: 3016	Unit No.: 3216	Unit No.: 3316

SUBJECT TO CHANGE WITHOUT NOTICE

Date: 14-01-2003 Sign: HEK	7	NIROS TELECOMMUNICATION A/S Hirsemarken 5, 3520 Farum	Radioboard TRX3001D/TRDX3001D
Date: 08-03-2006 Sign: HK	8		
Drawing No.: 0-3008-05-8		PC. Board No.: 790-7	

Copyright © 2004

12.3 Wiringside

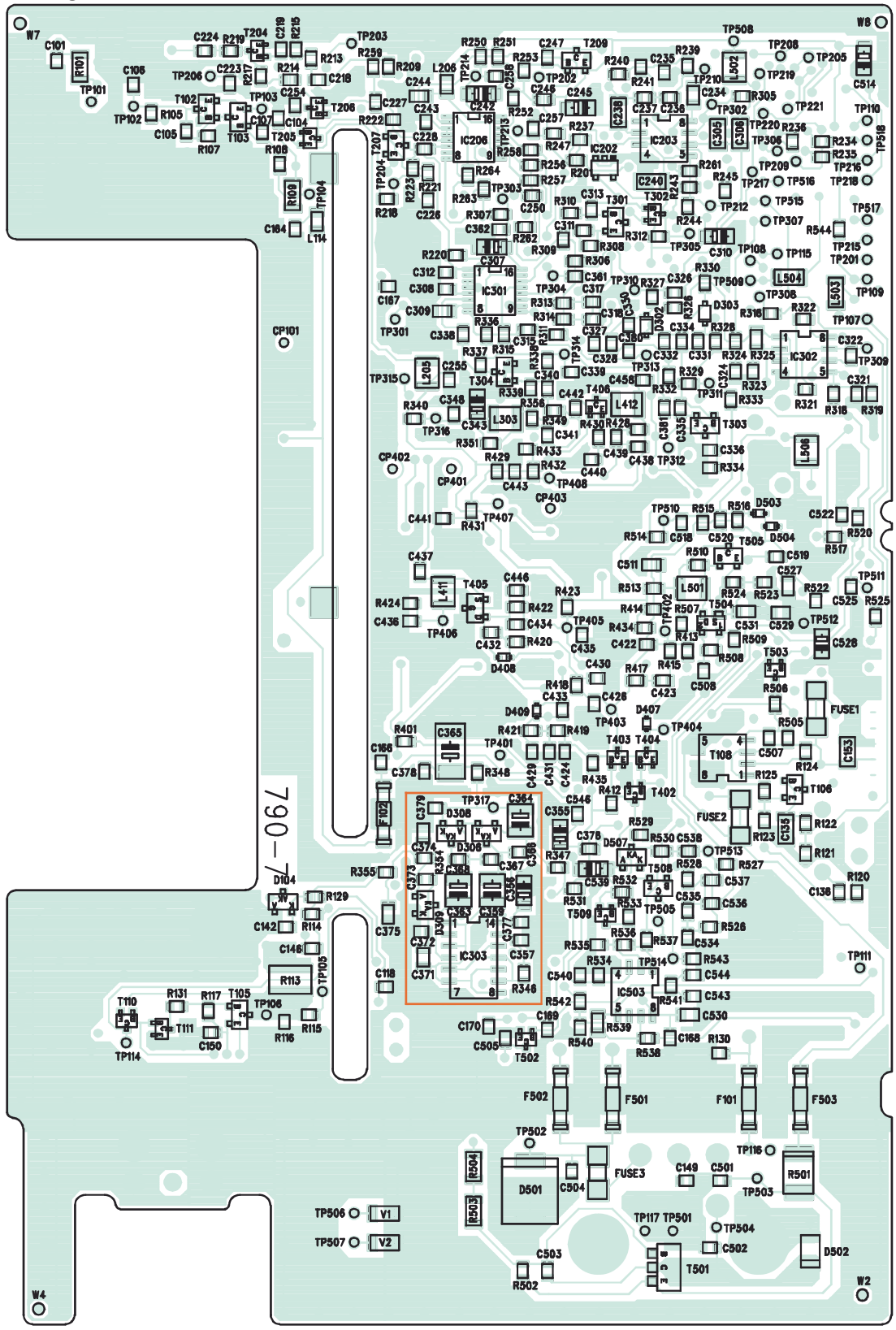

Wiringside 790-7

		SIMPLEX	DUPLEX	SIMPLEX BASE
25KHz	Low	Unit No.: 3000	Unit No.: 3200	Unit No.: 3300
25KHz	High	Unit No.: 3001	Unit No.: 3201	Unit No.: 3301
12,5KHz	Low	Unit No.: 3010	Unit No.: 3210	Unit No.: 3310
12,5KHz	High	Unit No.: 3011	Unit No.: 3211	Unit No.: 3311
12,5/25KHz	Low	Unit No.: 3015	Unit No.: 3215	Unit No.: 3315
12,5/25KHz	High	Unit No.: 3016	Unit No.: 3216	Unit No.: 3316

SUBJECT TO CHANGE WITHOUT NOTICE

Date: 14-01-2003 Sign: HEK	7	NIROS TELECOMMUNICATION A/S Hirsemarken 5, 3520 Farum	Radioboard TRX3001D/TRDX3001D
Date: 08-03-2006 Sign: HK	8		
Drawing No.: 0-3008-04-8		PC. Board No.: 790-7	

Copyright © 2004

12.4 Fieldlist

Name Radioboard TRX3001D/TRDX3001D — Date 08-03-2006
Drawing No. 0-3008-03-8 — Unit No. 3000

Component	Type	Side	Cord	Component	Type	Side	Cord
R101	SMT	BOTTOM	K7	R217	SMT	BOTTOM	K6
R102	SMT	TOP	K7	R218	SMT	BOTTOM	J5
R103	SMT	TOP	K7	R219	SMT	BOTTOM	K6
R105	SMT	BOTTOM	K7	R220	SMT	BOTTOM	J4
R106	SMT	TOP	K7	R221	SMT	BOTTOM	J4
R107	SMT	BOTTOM	K6	R222	SMT	BOTTOM	K5
R108	SMT	BOTTOM	J6	R223	SMT	BOTTOM	J5
R109	SMT	BOTTOM	J6	R234	SMT	BOTTOM	K1
R110	SMT	TOP	J6	R235	SMT	BOTTOM	J1
R111	SMT	TOP	I6	R236	SMT	BOTTOM	K1
R112	SMT	TOP	I5	R237	SMT	BOTTOM	K3
R113	SMT	BOTTOM	C6	R238	SMT	TOP	J3
R114	SMT	BOTTOM	D5	R239	SMT	BOTTOM	K2
R115	SMT	BOTTOM	C5	R240	SMT	BOTTOM	K3
R116	SMT	BOTTOM	C6	R241	SMT	BOTTOM	K3
R117	SMT	BOTTOM	C6	R242	SMT	TOP	I3
R118	SMT	TOP	J2	R243	SMT	BOTTOM	J2
R119	SMT	TOP	F1	R244	SMT	BOTTOM	J2
R120	SMT	BOTTOM	D1	R245	SMT	BOTTOM	J2
R121	SMT	BOTTOM	E1	R246	SMT	TOP	J3
R122	SMT	BOTTOM	E1	R247	SMT	BOTTOM	K3
R123	SMT	BOTTOM	E2	R248	SMT	TOP	J2
R124	SMT	BOTTOM	E1	R249	SMT	TOP	K3
R125	SMT	BOTTOM	E2	R250	SMT	BOTTOM	K4
R126	SMT	TOP	E1	R251	SMT	BOTTOM	K4
R127	SMT	TOP	E1	R252	SMT	BOTTOM	K4
R128	SMT	TOP	F1	R253	SMT	BOTTOM	K4
R129	SMT	BOTTOM	D5	R255	SMT	TOP	K3
R130	SMT	BOTTOM	C2	R256	SMT	BOTTOM	J4
R131	SMT	BOTTOM	C7	R257	SMT	BOTTOM	J4
R132	SMT	TOP	F1	R258	SMT	BOTTOM	K4
R133	SMT	TOP	F1	R259	SMT	BOTTOM	K5
R134	SMT	TOP	D1	R260	SMT	TOP	K3
R135	SMT	TOP	D1	R261	SMT	BOTTOM	J2
R136	SMT	TOP	D5	R262	SMT	BOTTOM	J4
R137	SMT	TOP	F1	R263	SMT	BOTTOM	J4
R138	SMT	TOP	F1	R264	SMT	BOTTOM	J4
R201	SMT	BOTTOM	J3	R301	SMT	TOP	K3
R202	SMT	TOP	K4	R302	SMT	TOP	K2
R203	SMT	TOP	J4	R303	SMT	TOP	K2
R204	SMT	TOP	K4	R304	SMT	TOP	K2
R205	SMT	TOP	K4	R305	SMT	BOTTOM	K2
R206	SMT	TOP	K4	R306	SMT	BOTTOM	J3
R207	SMT	TOP	K3	R307	SMT	BOTTOM	J4
R208	SMT	TOP	K5	R308	SMT	BOTTOM	J3
R209	SMT	BOTTOM	K5	R309	SMT	BOTTOM	J3
R210	SMT	TOP	K6	R310	SMT	BOTTOM	J3
R211	SMT	TOP	K1	R311	SMT	BOTTOM	I3
R212	SMT	TOP	K1	R312	SMT	BOTTOM	J3
R213	SMT	BOTTOM	K5	R313	SMT	BOTTOM	I3
R214	SMT	BOTTOM	K6	R314	SMT	BOTTOM	I3
R215	SMT	BOTTOM	K6	R315	SMT	BOTTOM	I4
R216	SMT	TOP	K6	R316	SMT	BOTTOM	I2

p. 1 of 8 — PC. Board No. 790-7

Copyright © 2004

Name Radioboard TRX3001D/TRDX3001D Date 08-03-2006
Drawing No. 0-3008-03-8 Unit No. 3000

Component	Type	Side	Cord	Component	Type	Side	Cord
R317	SMT	TOP	I2	R415	SMT	BOTTOM	F2
R318	SMT	BOTTOM	H1	R416	SMT	TOP	F2
R319	SMT	BOTTOM	H1	R417	SMT	BOTTOM	F3
R320	SMT	TOP	I1	R418	SMT	BOTTOM	F3
R321	SMT	BOTTOM	I1	R419	SMT	BOTTOM	F3
R322	SMT	BOTTOM	I1	R420	SMT	BOTTOM	F4
R323	SMT	BOTTOM	I2	R421	SMT	BOTTOM	F4
R324	SMT	BOTTOM	I2	R422	SMT	BOTTOM	G4
R325	SMT	BOTTOM	I2	R423	SMT	BOTTOM	G3
R326	SMT	BOTTOM	I2	R424	SMT	BOTTOM	G5
R327	SMT	BOTTOM	I3	R425	SMT	TOP	H3
R328	SMT	BOTTOM	I2	R426	SMT	TOP	H3
R329	SMT	BOTTOM	I2	R427	SMT	TOP	H3
R330	SMT	BOTTOM	I2	R428	SMT	BOTTOM	H3
R331	SMT	TOP	H2	R429	SMT	BOTTOM	H4
R332	SMT	BOTTOM	I2	R430	SMT	BOTTOM	H3
R333	SMT	BOTTOM	H2	R431	SMT	BOTTOM	G4
R334	SMT	BOTTOM	H2	R432	SMT	BOTTOM	H4
R335	SMT	TOP	G2	R433	SMT	BOTTOM	H4
R336	SMT	BOTTOM	I4	R434	SMT	BOTTOM	F3
R337	SMT	BOTTOM	I4	R435	SMT	BOTTOM	E3
R338	SMT	BOTTOM	I3	R436	SMT	TOP	F2
R339	SMT	BOTTOM	I4	R437	SMT	TOP	F3
R340	SMT	BOTTOM	H5	R501	SMT	BOTTOM	B1
R341	SMT	TOP	H5	R502	SMT	BOTTOM	A4
R342	SMT	TOP	H4	R503	SMT	BOTTOM	A4
R343	SMT	TOP	H4	R504	SMT	BOTTOM	B4
R344	SMT	TOP	H4	R505	SMT	BOTTOM	F1
R345	SMT	TOP	I5	R506	SMT	BOTTOM	F2
R346	SMT	BOTTOM	D4	R507	SMT	BOTTOM	F2
R347	SMT	BOTTOM	D3	R508	SMT	BOTTOM	F2
R348	SMT	BOTTOM	E4	R509	SMT	BOTTOM	F2
R349	SMT	BOTTOM	H3	R510	SMT	BOTTOM	G2
R350	SMT	TOP	K2	R511	SMT	TOP	E3
R351	SMT	BOTTOM	H4	R512	SMT	TOP	D3
R352	SMT	TOP	H2	R513	SMT	BOTTOM	G3
R354	SMT	BOTTOM	D5	R514	SMT	BOTTOM	G3
R355	SMT	BOTTOM	D5	R515	SMT	BOTTOM	G2
R356	SMT	BOTTOM	H4	R516	SMT	BOTTOM	G2
R401	SMT	BOTTOM	E5	R517	SMT	BOTTOM	G1
R402	SMT	TOP	D5	R518	SMT	TOP	G2
R403	SMT	TOP	E5	R519	SMT	TOP	G1
R404	SMT	TOP	E4	R520	SMT	BOTTOM	G1
R405	SMT	TOP	E4	R521	SMT	TOP	G1
R406	SMT	TOP	E4	R522	SMT	BOTTOM	G1
R407	SMT	TOP	E4	R523	SMT	BOTTOM	G2
R408	SMT	TOP	E5	R524	SMT	BOTTOM	G2
R409	SMT	TOP	F4	R525	SMT	BOTTOM	G1
R410	SMT	TOP	F5	R526	SMT	BOTTOM	D2
R411	SMT	TOP	G5	R527	SMT	BOTTOM	D2
R412	SMT	BOTTOM	E3	R528	SMT	BOTTOM	D2
R413	SMT	BOTTOM	F2	R529	SMT	BOTTOM	E3
R414	SMT	BOTTOM	G3	R530	SMT	BOTTOM	E2

p. 2 of 8 PC. Board No. 790-7

Copyright © 2004

Name Radioboard TRX3001D/TRDX3001D Date 08-03-2006
Drawing No. 0-3008-03-8 Unit No. 3000

Component	Type	Side	Cord	Component	Type	Side	Cord
R531	SMT	BOTTOM	D3	C140	SMT	TOP	D1
R532	SMT	BOTTOM	D3	C141	SMT	TOP	F1
R533	SMT	BOTTOM	D3	C142	SMT	BOTTOM	D6
R534	SMT	BOTTOM	C3	C143	SMT	TOP	C1
R535	SMT	BOTTOM	D3	C144	SMT	TOP	C2
R536	SMT	BOTTOM	D3	C145	SMT	TOP	D6
R537	SMT	BOTTOM	D3	C146	SMT	BOTTOM	D5
R538	SMT	BOTTOM	C3	C147	SMT	TOP	I2
R539	SMT	BOTTOM	C3	C148	SMT	TOP	J2
R540	SMT	BOTTOM	C3	C149	SMT	BOTTOM	B2
R541	SMT	BOTTOM	C2	C150	SMT	BOTTOM	C6
R542	SMT	BOTTOM	C3	C151	SMT	TOP	F1
R543	SMT	BOTTOM	D2	C152	SMT	TOP	F2
R544	SMT	BOTTOM	J1	C153	SMT	BOTTOM	E1
C101	SMT	BOTTOM	K8	C154	SMT	TOP	K6
C102	SMT	TOP	K7	C155	SMT	TOP	K7
C103	SMT	TOP	K7	C156	SMT	TOP	J6
C104	SMT	BOTTOM	K6	C157	SMT	TOP	K6
C105	SMT	BOTTOM	K7	C160	SMT	TOP	K7
C106	SMT	BOTTOM	K7	C161	SMT	TOP	C7
C107	SMT	BOTTOM	K6	C162	SMT	TOP	C8
C108	SMT	TOP	K7	C163	SMT	TOP	C8
C109	SMT	TOP	K7	C164	SMT	BOTTOM	J6
C110	SMT	TOP	J6	C165	SMT	TOP	F2
C111	SMT	TOP	J6	C166	SMT	BOTTOM	E5
C112	SMT	TOP	H6	C167	SMT	BOTTOM	I5
C113	SMT	TOP	H5	C168	SMT	BOTTOM	C2
C114	SMT	TOP	H5	C169	SMT	BOTTOM	C3
C115	SMT	TOP	D6	C170	SMT	BOTTOM	C4
C116	SMT	TOP	G6	C201	SMT	TOP	J1
C117	SMT	TOP	F6	C202	SMT	TOP	K4
C118	SMT	BOTTOM	C5	C203	SMT	TOP	K3
C119	SMT	TOP	D6	C204	SMT	TOP	K4
C120	SMT	TOP	D5	C205	SMT	TOP	K3
C121	SMT	TOP	C5	C206	SMT	TOP	K4
C122	SMT	TOP	D6	C207	SMT	TOP	K4
C123	SMT	TOP	C6	C209	SMT	TOP	K4
C124	SMT	TOP	C6	C210	SMT	TOP	K5
C125	SMT	TOP	C6	C211	SMT	TOP	K4
C126	SMT	TOP	C7	C212	SMT	TOP	K5
C127	SMT	TOP	C7	C213	SMT	TOP	K4
C128	SMT	TOP	C7	C214	SMT	TOP	K5
C129	SMT	TOP	I1	C215	SMT	TOP	K4
C130	SMT	TOP	K1	C216	SMT	TOP	K5
C131	SMT	TOP	I1	C217	SMT	TOP	K5
C132	SMT	TOP	F1	C218	SMT	BOTTOM	K5
C133	SMT	TOP	J2	C219	SMT	BOTTOM	K6
C134	SMT	TOP	J2	C220	SMT	TOP	K1
C135	SMT	BOTTOM	E1	C221	SMT	TOP	K1
C136	SMT	BOTTOM	D1	C222	SMT	TOP	K6
C137	SMT	TOP	D1	C223	SMT	BOTTOM	K6
C138	SMT	TOP	E2	C224	SMT	BOTTOM	K6
C139	SMT	TOP	E2	C225	SMT	TOP	K6

p. 3 of 8 PC. Board No. 790-7

Copyright © 2004

Name Radioboard TRX3001D/TRDX3001D Date 08-03-2006
Drawing No. 0-3008-03-8 Unit No. 3000

Component	Type	Side	Cord	Component	Type	Side	Cord
C226	SMT	BOTTOM	J4	C324	SMT	BOTTOM	I2
C227	SMT	BOTTOM	K5	C325	SMT	TOP	I2
C228	SMT	BOTTOM	K5	C326	SMT	BOTTOM	I2
C230	SMT	TOP	K1	C327	SMT	BOTTOM	I3
C232	SMT	TOP	J2	C328	SMT	BOTTOM	I3
C234	SMT	BOTTOM	K2	C329	SMT	TOP	H2
C235	SMT	BOTTOM	K2	C330	SMT	BOTTOM	I3
C236	SMT	BOTTOM	K2	C331	SMT	BOTTOM	I2
C237	SMT	BOTTOM	K3	C332	SMT	BOTTOM	I2
C238	SMT	BOTTOM	K3	C333	SMT	TOP	H2
C239	SMT	TOP	J4	C334	SMT	BOTTOM	I2
C240	SMT	BOTTOM	J3	C335	SMT	BOTTOM	H2
C241	SMT	TOP	J3	C336	SMT	BOTTOM	H2
C242	SMT	BOTTOM	K4	C337	SMT	TOP	G2
C243	SMT	BOTTOM	K4	C338	SMT	BOTTOM	I4
C244	SMT	BOTTOM	K5	C339	SMT	BOTTOM	I3
C245	SMT	BOTTOM	K3	C340	SMT	BOTTOM	I3
C246	SMT	BOTTOM	K3	C341	SMT	BOTTOM	H3
C247	SMT	BOTTOM	K3	C342	SMT	TOP	H4
C249	SMT	TOP	J1	C343	SMT	BOTTOM	H4
C250	SMT	BOTTOM	J4	C344	SMT	TOP	I4
C251	SMT	TOP	J1	C345	SMT	TOP	I3
C252	SMT	TOP	K2	C346	SMT	TOP	I3
C253	SMT	TOP	J1	C347	SMT	TOP	H4
C254	SMT	BOTTOM	K6	C348	SMT	BOTTOM	H4
C255	SMT	BOTTOM	I4	C349	SMT	TOP	I3
C256	SMT	TOP	K3	C350	SMT	TOP	I4
C257	SMT	BOTTOM	K4	C352	SMT	TOP	I4
C258	SMT	BOTTOM	K4	C353	SMT	TOP	I4
C259	SMT	TOP	K5	C354	SMT	TOP	I5
C260	SMT	TOP	K4	C355	SMT	BOTTOM	E3
C261	SMT	TOP	K6	C356	SMT	BOTTOM	D4
C301	SMT	TOP	K3	C357	SMT	BOTTOM	D4
C302	SMT	TOP	K2	C359	SMT	BOTTOM	D4
C303	SMT	TOP	K2	C360	SMT	TOP	K2
C304	SMT	TOP	K2	C361	SMT	BOTTOM	I3
C305	SMT	BOTTOM	K2	C362	SMT	BOTTOM	J4
C306	SMT	BOTTOM	K2	C363	SMT	BOTTOM	D4
C307	SMT	BOTTOM	J4	C364	SMT	BOTTOM	E4
C308	SMT	BOTTOM	I4	C365	SMT	BOTTOM	E4
C309	SMT	BOTTOM	I4	C366	SMT	BOTTOM	E4
C310	SMT	BOTTOM	J2	C367	SMT	BOTTOM	D4
C311	SMT	BOTTOM	J3	C368	SMT	BOTTOM	D4
C312	SMT	BOTTOM	J4	C370	SMT	TOP	H2
C313	SMT	BOTTOM	J3	C371	SMT	BOTTOM	D5
C315	SMT	BOTTOM	I4	C372	SMT	BOTTOM	D5
C317	SMT	BOTTOM	I3	C373	SMT	BOTTOM	D4
C318	SMT	BOTTOM	I3	C374	SMT	BOTTOM	E5
C319	SMT	TOP	K2	C375	SMT	BOTTOM	D5
C320	SMT	TOP	I2	C376	SMT	BOTTOM	E3
C321	SMT	BOTTOM	H1	C377	SMT	BOTTOM	D4
C322	SMT	BOTTOM	I1	C378	SMT	BOTTOM	E5
C323	SMT	TOP	J2	C379	SMT	BOTTOM	E4

p. 4 of 8 PC. Board No. 790-7

Copyright © 2004

Name Radioboard TRX3001D/TRDX3001D Date 08-03-2006
Drawing No. 0-3008-03-8 Unit No. 3000

Component	Type	Side	Cord	Component	Type	Side	Cord
C380	SMT	BOTTOM	I3	C453	SMT	TOP	G4
C381	SMT	BOTTOM	H2	C454	SMT	TOP	G5
C401	SMT	TOP	D4	C455	SMT	TOP	G5
C402	SMT	TOP	E5	C456	SMT	TOP	G4
C403	SMT	TOP	D4	C457	SMT	TOP	G4
C404	SMT	TOP	D4	C458	SMT	BOTTOM	I3
C405	SMT	TOP	D4	C501	SMT	BOTTOM	B2
C406	SMT	TOP	E4	C502	SMT	BOTTOM	A2
C407	SMT	TOP	E4	C503	SMT	BOTTOM	A3
C408	SMT	TOP	E4	C504	SMT	BOTTOM	B3
C409	SMT	TOP	E5	C505	SMT	BOTTOM	C4
C410	SMT	TOP	E5	C506	SMT	TOP	C3
C411	SMT	TOP	E4	C507	SMT	BOTTOM	F2
C412	SMT	TOP	E4	C508	SMT	BOTTOM	F2
C413	SMT	TOP	E4	C509	SMT	TOP	E2
C414	SMT	TOP	E4	C510	SMT	TOP	E3
C415	SMT	TOP	F4	C511	SMT	BOTTOM	G3
C416	SMT	TOP	F5	C512	SMT	TOP	D3
C417	SMT	TOP	G5	C513	SMT	TOP	D3
C419	SMT	TOP	F2	C514	SMT	BOTTOM	K1
C420	SMT	TOP	F2	C515	SMT	TOP	J1
C421	SMT	TOP	F2	C516	SMT	TOP	I1
C422	SMT	BOTTOM	F3	C517	SMT	TOP	I2
C423	SMT	BOTTOM	F2	C518	SMT	BOTTOM	G2
C424	SMT	BOTTOM	E3	C519	SMT	BOTTOM	G1
C425	SMT	TOP	F2	C520	SMT	BOTTOM	G2
C426	SMT	BOTTOM	F3	C521	SMT	TOP	G2
C427	SMT	TOP	G3	C522	SMT	BOTTOM	G1
C428	SMT	TOP	F3	C523	SMT	TOP	G1
C429	SMT	BOTTOM	E4	C524	SMT	TOP	G2
C430	SMT	BOTTOM	F3	C525	SMT	BOTTOM	G1
C431	SMT	BOTTOM	E3	C526	SMT	TOP	G1
C432	SMT	BOTTOM	F4	C527	SMT	BOTTOM	G1
C433	SMT	BOTTOM	F3	C528	SMT	BOTTOM	F1
C434	SMT	BOTTOM	F4	C529	SMT	BOTTOM	G1
C435	SMT	BOTTOM	F3	C530	SMT	BOTTOM	C2
C436	SMT	BOTTOM	G5	C531	SMT	BOTTOM	G2
C437	SMT	BOTTOM	G5	C532	SMT	TOP	G2
C438	SMT	BOTTOM	H3	C533	SMT	TOP	J2
C439	SMT	BOTTOM	H3	C534	SMT	BOTTOM	D2
C440	SMT	BOTTOM	H3	C535	SMT	BOTTOM	D2
C441	SMT	BOTTOM	G4	C536	SMT	BOTTOM	D2
C442	SMT	BOTTOM	H3	C537	SMT	BOTTOM	D2
C443	SMT	BOTTOM	H4	C538	SMT	BOTTOM	E2
C444	SMT	TOP	H5	C539	SMT	BOTTOM	D3
C445	SMT	TOP	G4	C540	SMT	BOTTOM	C3
C446	SMT	BOTTOM	G4	C541	SMT	TOP	J2
C447	SMT	TOP	F4	C542	SMT	TOP	J1
C448	SMT	TOP	F4	C543	SMT	BOTTOM	C2
C449	SMT	TOP	F4	C544	SMT	BOTTOM	C2
C450	SMT	TOP	F4	C545	SMT	TOP	K1
C451	SMT	TOP	G4	C546	SMT	BOTTOM	E3
C452	SMT	TOP	G4	C547	SMT	TOP	C4

p. 5 of 8 PC. Board No. 790-7

Copyright © 2004

Name Radioboard TRX3001D/TRDX3001D Date 08-03-2006
Drawing No. 0-3008-03-8 Unit No. 3000

Component	Type	Side	Cord	Component	Type	Side	Cord
C548	SMT	TOP	C4	T507	SMT	TOP	D3
F101	SMT	BOTTOM	B2	T508	SMT	BOTTOM	D3
F102	SMT	BOTTOM	E5	T509	SMT	BOTTOM	D3
F401	SMT	TOP	G3	D101	SMT	TOP	E6
F402	SMT	TOP	G3	D102	SMT	TOP	D5
F403	SMT	TOP	E3	D103	SMT	TOP	D4
F404	SMT	TOP	E3	D104	SMT	BOTTOM	D6
F501	SMT	BOTTOM	B3	D201	SMT	TOP	J4
F502	SMT	BOTTOM	B3	D202	SMT	TOP	J4
F503	SMT	BOTTOM	B1	D203	SMT	TOP	K4
F504	SMT	TOP	H2	D301	SMT	TOP	I2
F505	SMT	TOP	H1	D302	SMT	BOTTOM	I3
F506	SMT	TOP	C4	D303	SMT	BOTTOM	I2
F507	SMT	TOP	C4	D304	SMT	TOP	I4
X301	SMT	TOP	I3	D305	SMT	TOP	I4
X302	SMT	TOP	I3	D306	SMT	BOTTOM	E4
T101	SMT	TOP	K7	D307	SMT	TOP	I4
T102	SMT	BOTTOM	K6	D308	SMT	BOTTOM	E4
T103	SMT	BOTTOM	K6	D309	SMT	BOTTOM	D4
T104	SMT	TOP	J7	D401	SMT	TOP	E4
T105	SMT	BOTTOM	C6	D402	SMT	TOP	E4
T106	SMT	BOTTOM	E1	D403	SMT	TOP	G4
T107	SMT	TOP	F1	D404	SMT	TOP	G4
T108	SMT	BOTTOM	E2	D405	SMT	TOP	F2
T110	SMT	BOTTOM	C7	D406	SMT	TOP	F2
T111	SMT	BOTTOM	C7	D407	SMT	BOTTOM	F3
T201	SMT	TOP	K4	D408	SMT	BOTTOM	F4
T202	SMT	TOP	K5	D409	SMT	BOTTOM	F4
T204	SMT	BOTTOM	K6	D410	SMT	TOP	G4
T205	SMT	BOTTOM	K5	D501	SMT	BOTTOM	B4
T206	SMT	BOTTOM	K5	D502	SMT	BOTTOM	A1
T207	SMT	BOTTOM	K5	D503	SMT	BOTTOM	G2
T208	SMT	TOP	J2	D504	SMT	BOTTOM	G2
T209	SMT	BOTTOM	K3	D505	SMT	TOP	G1
T210	SMT	TOP	K3	D506	SMT	TOP	G1
T301	SMT	BOTTOM	J3	D507	SMT	BOTTOM	D3
T302	SMT	BOTTOM	J3	IC101	SMT	TOP	G6
T303	SMT	BOTTOM	H2	IC102	LEAD	TOP	E1
T304	SMT	BOTTOM	I4	IC103	LEAD	TOP	E1
T305	SMT	TOP	H3	IC201	SMT	TOP	K1
T306	SMT	TOP	I4	IC202	SMT	BOTTOM	J3
T401	SMT	TOP	E5	IC203	SMT	BOTTOM	K2
T402	SMT	BOTTOM	E3	IC204	SMT	TOP	I2
T403	SMT	BOTTOM	E3	IC205	SMT	TOP	J2
T404	SMT	BOTTOM	E3	IC206	SMT	BOTTOM	K4
T405	SMT	BOTTOM	G4	IC207	SMT	TOP	J2
T406	SMT	BOTTOM	H3	IC301	SMT	BOTTOM	I4
T501	SMT	BOTTOM	A2	IC302	SMT	BOTTOM	I1
T502	SMT	BOTTOM	C4	IC303	SMT	BOTTOM	D4
T503	SMT	BOTTOM	F2	IC304	SMT	TOP	I2
T504	SMT	BOTTOM	G2	IC501	SMT	TOP	D2
T505	SMT	BOTTOM	G2	IC502	SMT	TOP	G2
T506	SMT	TOP	D3	IC503	SMT	BOTTOM	C3

p. 6 of 8 PC. Board No. 790-7

Copyright © 2004

Name Radioboard TRX3001D/TRDX3001D Date 08-03-2006
Drawing No. 0-3008-03-8 Unit No. 3000

Component	Type	Side	Cord	Component	Type	Side	Cord
TR401	SMT	TOP	G5	TP111	SMT	BOTTOM	D1
TR402	SMT	TOP	G4	TP114	SMT	BOTTOM	C7
L101	SMT	TOP	K7	TP115	SMT	BOTTOM	J1
L102	SMT	TOP	K6	TP116	SMT	BOTTOM	B2
L103	SMT	TOP	H6	TP117	SMT	BOTTOM	A3
L105	SMT	TOP	E6	TP201	SMT	BOTTOM	J1
L106	SMT	TOP	D6	TP202	SMT	BOTTOM	K4
L107	SMT	TOP	C6	TP203	SMT	BOTTOM	K5
L108	SMT	TOP	C6	TP204	SMT	BOTTOM	J5
L109	SMT	TOP	C7	TP205	SMT	BOTTOM	K1
L110	SMT	TOP	I1	TP206	SMT	BOTTOM	K6
L111	SMT	TOP	K6	TP208	SMT	BOTTOM	K1
L113	SMT	TOP	C7	TP209	SMT	BOTTOM	J1
L114	SMT	BOTTOM	J5	TP210	SMT	BOTTOM	K2
L201	SMT	TOP	J4	TP212	SMT	BOTTOM	J2
L202	SMT	TOP	K4	TP213	SMT	BOTTOM	K4
L203	SMT	TOP	K4	TP214	SMT	BOTTOM	K4
L204	SMT	TOP	K5	TP215	SMT	BOTTOM	J1
L205	SMT	BOTTOM	I4	TP216	SMT	BOTTOM	J1
L206	SMT	BOTTOM	K4	TP217	SMT	BOTTOM	J2
L301	SMT	TOP	H3	TP218	SMT	BOTTOM	J1
L302	SMT	TOP	I5	TP219	SMT	BOTTOM	K2
L303	SMT	BOTTOM	H4	TP220	SMT	BOTTOM	K2
L304	SMT	TOP	I4	TP221	SMT	BOTTOM	K1
L305	SMT	TOP	I4	TP301	SMT	BOTTOM	I5
L307	SMT	TOP	J4	TP302	SMT	BOTTOM	K2
L401	SMT	TOP	D4	TP303	SMT	BOTTOM	J4
L403	SMT	TOP	E4	TP304	SMT	BOTTOM	I3
L405	SMT	TOP	E4	TP305	SMT	BOTTOM	J2
L406	SMT	TOP	F4	TP306	SMT	BOTTOM	K1
L408	SMT	TOP	G4	TP307	SMT	BOTTOM	J2
L410	SMT	TOP	F3	TP308	SMT	BOTTOM	I2
L411	SMT	BOTTOM	G4	TP309	SMT	BOTTOM	I1
L412	SMT	BOTTOM	H3	TP310	SMT	BOTTOM	I3
L501	SMT	BOTTOM	G2	TP311	SMT	BOTTOM	I2
L502	SMT	BOTTOM	K2	TP312	SMT	BOTTOM	H2
L503	SMT	BOTTOM	I1	TP313	SMT	BOTTOM	I3
L504	SMT	BOTTOM	I1	TP314	SMT	BOTTOM	I3
L505	SMT	TOP	G1	TP315	SMT	BOTTOM	I5
L506	SMT	BOTTOM	H1	TP316	SMT	BOTTOM	H4
FUSE1	SMT	BOTTOM	F1	TP317	SMT	BOTTOM	E4
FUSE2	SMT	BOTTOM	E2	TP401	SMT	BOTTOM	E4
FUSE3	SMT	BOTTOM	B3	TP402	SMT	BOTTOM	F2
TP101	SMT	BOTTOM	K7	TP403	SMT	BOTTOM	F3
TP102	SMT	BOTTOM	K7	TP404	SMT	BOTTOM	F2
TP103	SMT	BOTTOM	K6	TP405	SMT	BOTTOM	F3
TP104	SMT	BOTTOM	J5	TP406	SMT	BOTTOM	G4
TP105	SMT	BOTTOM	C5	TP407	SMT	BOTTOM	H4
TP106	SMT	BOTTOM	C6	TP408	SMT	BOTTOM	H3
TP107	SMT	BOTTOM	I1	TP501	SMT	BOTTOM	A2
TP108	SMT	BOTTOM	J2	TP502	SMT	BOTTOM	B4
TP109	SMT	BOTTOM	I1	TP503	SMT	BOTTOM	B2
TP110	SMT	BOTTOM	K1	TP504	SMT	BOTTOM	A2

p. 7 of 8 PC. Board No. 790-7

Copyright © 2004

Name Radioboard TRX3001D/TRDX3001D Date 08-03-2006
Drawing No. 0-3008-03-8 Unit No. 3000

Component	Type	Side	Cord	Component	Type	Side	Cord
TP505	SMT	BOTTOM	D3				
TP506	SMT	BOTTOM	A5				
TP507	SMT	BOTTOM	A5				
TP508	SMT	BOTTOM	K2				
TP509	SMT	BOTTOM	I2				
TP510	SMT	BOTTOM	G2				
TP511	SMT	BOTTOM	G1				
TP512	SMT	BOTTOM	G1				
TP513	SMT	BOTTOM	E2				
TP514	SMT	BOTTOM	D2				
TP515	SMT	BOTTOM	J2				
TP516	SMT	BOTTOM	J1				
TP517	SMT	BOTTOM	J1				
TP518	SMT	BOTTOM	K1				
CP101	LEAD	BOTTOM	I6				
CP401	LEAD	BOTTOM	H4				
CP402	LEAD	BOTTOM	H5				
CP403	LEAD	BOTTOM	G3				
MP101	SMT	TOP	K1				
MP201	SMT	TOP	K3				
MP202	SMT	TOP	K2				
MP203	SMT	TOP	K2				
MP204	SMT	TOP	K1				
MP205	SMT	TOP	K1				
MP206	SMT	TOP	K2				
MP301	SMT	TOP	K2				
JU401	SMT	TOP	H5				
J1	LEAD	TOP	B7				
J2	SMT	TOP	I1				
J3	LEAD	TOP	B2				
JA1	SMT	TOP	D4				
JA2	SMT	TOP	D4				
W1	SMT	TOP	A1				
W2	SMT	BOTTOM	A1				
W3	SMT	TOP	A8				
W4	SMT	BOTTOM	A8				
W5	SMT	TOP	L1				
W6	SMT	TOP	L8				
W7	SMT	BOTTOM	L8				
W8	SMT	BOTTOM	L1				
V1	SMT	BOTTOM	A5				
V2	SMT	BOTTOM	A5				

p. 8 of 8 PC. Board No. 790-7

Copyright © 2004

12.5 Partlist

Partlist for Radioboard TRX3001D/TRDX3001D Date 07-03-2006
Drawing No. 0-3008-03-8 Unit No. 3000

Component	Description		Value	Niros No.
	Simplex_Low	S25L	25 KHz	3000
	Simplex_High	S25H	25 KHz	3001
	Simplex_Low	S12L	12,5 KHz	3010
	Simplex_High	S12H	12,5 KHz	3011
	Simplex_Low	SSWL	SW 12,5/25 KHz	3015
	Simplex_High	SSWH	SW 12,5/25 KHz	3016
	Duplex_Low	D25L	25 KHz	3200
	Duplex_High	D25H	25 KHz	3201
	Duplex_Low	D12L	12,5 KHz	3210
	Duplex_High	D12H	12,5 KHz	3211
	Duplex_Low	DSWL	SW 12,5/25 KHz	3215
	Duplex_High	DSWH	SW 12,5/25 KHz	3216
	Simplex Base_Low	B25L	25 KHz	3300
	Simplex Base_High	B25H	25 KHz	3301
	Simplex Base_Low	B12L	12,5 KHz	3310
	Simplex Base_High	B12H	12,5 KHz	3311
	Simplex Base_Low	BSWL	SW 12,5/25 KHz	3315
	Simplex Base_High	BSWH	SW 12,5/25 KHz	3316
R101	Resistor,chip1206		100 Ohm	12101
R102	Resistor,chip603		820 Ohm	14821
R103	Resistor,chip603		220 Ohm	14221
R105	Resistor,chip603		1 Kohm	14102
R106	Resistor,chip603		1 Kohm	14102
R107	Resistor,chip603		22 Kohm	14223
R108	Resistor,chip603		150 Ohm	14151
R109	Resistor,chip1206		5,6 Ohm	12569
R110	Resistor,chip805		220 Ohm	13221
R111	Resistor,chip1206		27 Ohm	12270
R112	Resistor,chip805		220 Ohm	13221
R113	Resistor,chip1218	S25L	270 Ohm	10925
	Resistor,chip1218	S25H	270 Ohm	10925
	Resistor,chip1218	S12L	270 Ohm	10925
	Resistor,chip1218	S12H	270 Ohm	10925
	Resistor,chip1218	SSWL	270 Ohm	10925
	Resistor,chip1218	SSWH	270 Ohm	10925
	Resistor,chip1218	D25L	Not used	
	Resistor,chip1218	D25H	Not used	
	Resistor,chip1218	D12L	Not used	
	Resistor,chip1218	D12H	Not used	
	Resistor,chip1218	DSWL	Not used	
	Resistor,chip1218	DSWH	Not used	
	Resistor,chip1218	B25L	270 Ohm	10925
	Resistor,chip1218	B25H	270 Ohm	10925
	Resistor,chip1218	B12L	270 Ohm	10925
	Resistor,chip1218	B12H	270 Ohm	10925
	Resistor,chip1218	BSWL	270 Ohm	10925
	Resistor,chip1218	BSWH	270 Ohm	10925
R114	Resistor,chip603	S25L	1 Kohm	14102

p. 1 of 54 PC. Board No. 790-7

Copyright © 2004

Partlist for Radioboard TRX3001D/TRDX3001D Date 07-03-2006
Drawing No. 0-3008-03-8 Unit No. 3000

Component	Description	Value	Niros No.
	Resistor,chip603 S25H	1 Kohm	14102
	Resistor,chip603 S12L	1 Kohm	14102
	Resistor,chip603 S12H	1 Kohm	14102
	Resistor,chip603 SSWL	1 Kohm	14102
	Resistor,chip603 SSWH	1 Kohm	14102
	Resistor,chip603 D25L	Not used	
	Resistor,chip603 D25H	Not used	
	Resistor,chip603 D12L	Not used	
	Resistor,chip603 D12H	Not used	
	Resistor,chip603 DSWL	Not used	
	Resistor,chip603 DSWH	Not used	
	Resistor,chip603 B25L	1 Kohm	14102
	Resistor,chip603 B25H	1 Kohm	14102
	Resistor,chip603 B12L	1 Kohm	14102
	Resistor,chip603 B12H	1 Kohm	14102
	Resistor,chip603 BSWL	1 Kohm	14102
	Resistor,chip603 BSWH	1 Kohm	14102
R115	Resistor,chip603 S25L	220 Ohm	14221
	Resistor,chip603 S25H	220 Ohm	14221
	Resistor,chip603 S12L	220 Ohm	14221
	Resistor,chip603 S12H	220 Ohm	14221
	Resistor,chip603 SSWL	220 Ohm	14221
	Resistor,chip603 SSWH	220 Ohm	14221
	Resistor,chip603 D25L	Not used	
	Resistor,chip603 D25H	Not used	
	Resistor,chip603 D12L	Not used	
	Resistor,chip603 D12H	Not used	
	Resistor,chip603 DSWL	Not used	
	Resistor,chip603 DSWH	Not used	
	Resistor,chip603 B25L	220 Ohm	14221
	Resistor,chip603 B25H	220 Ohm	14221
	Resistor,chip603 B12L	220 Ohm	14221
	Resistor,chip603 B12H	220 Ohm	14221
	Resistor,chip603 BSWL	220 Ohm	14221
	Resistor,chip603 BSWH	220 Ohm	14221
R116	Resistor,chip603 S25L	10 Kohm	14103
	Resistor,chip603 S25H	10 Kohm	14103
	Resistor,chip603 S12L	10 Kohm	14103
	Resistor,chip603 S12H	10 Kohm	14103
	Resistor,chip603 SSWL	10 Kohm	14103
	Resistor,chip603 SSWH	10 Kohm	14103
	Resistor,chip603 D25L	Not used	
	Resistor,chip603 D25H	Not used	
	Resistor,chip603 D12L	Not used	
	Resistor,chip603 D12H	Not used	
	Resistor,chip603 DSWL	Not used	
	Resistor,chip603 DSWH	Not used	
	Resistor,chip603 B25L	10 Kohm	14103
	Resistor,chip603 B25H	10 Kohm	14103
	Resistor,chip603 B12L	10 Kohm	14103
	Resistor,chip603 B12H	10 Kohm	14103

p. 2 of 54 PC. Board No. 790-7

Copyright © 2004

Partlist for Radioboard TRX3001D/TRDX3001D Date 07-03-2006
Drawing No. 0-3008-03-8 Unit No. 3000

Component	Description		Value	Niros No.
	Resistor,chip603	BSWL	10 Kohm	14103
	Resistor,chip603	BSWH	10 Kohm	14103
R117	Resistor,chip603	S25L	10 Kohm	14103
	Resistor,chip603	S25H	10 Kohm	14103
	Resistor,chip603	S12L	10 Kohm	14103
	Resistor,chip603	S12H	10 Kohm	14103
	Resistor,chip603	SSWL	10 Kohm	14103
	Resistor,chip603	SSWH	10 Kohm	14103
	Resistor,chip603	D25L	Not used	
	Resistor,chip603	D25H	Not used	
	Resistor,chip603	D12L	Not used	
	Resistor,chip603	D12H	Not used	
	Resistor,chip603	DSWL	Not used	
	Resistor,chip603	DSWH	Not used	
	Resistor,chip603	B25L	10 Kohm	14103
	Resistor,chip603	B25H	10 Kohm	14103
	Resistor,chip603	B12L	10 Kohm	14103
	Resistor,chip603	B12H	10 Kohm	14103
	Resistor,chip603	BSWL	10 Kohm	14103
	Resistor,chip603	BSWH	10 Kohm	14103
R118	Resistor,chip603		3,3 Kohm	14332
R119	Resistor,chip603		47 Kohm	14473
R120	Resistor,chip603		47 Kohm	14473
R121	Resistor,chip603		100 Kohm	14104
R122	Resistor,chip603		180 Kohm	14184
R123	Resistor,chip603		4,7 Kohm	14472
R124	Resistor,chip603		100 Kohm	14104
R125	Resistor,chip603		18 Kohm	14183
R126	Resistor,chip1206		390 Ohm	12391
R127	Resistor,chip603		12 Ohm	14120
R128	Resistor,chip603		1,8 Mohm	14185
R129	Resistor,chip603		820 Kohm	14824
R130	Resistor,chip603		4,7 Kohm	14472
R131	Resistor,chip603	S25L	10 Kohm	14103
	Resistor,chip603	S25H	10 Kohm	14103
	Resistor,chip603	S12L	10 Kohm	14103
	Resistor,chip603	S12H	10 Kohm	14103
	Resistor,chip603	SSWL	10 Kohm	14103
	Resistor,chip603	SSWH	10 Kohm	14103
	Resistor,chip603	D25L	Not used	
	Resistor,chip603	D25H	Not used	
	Resistor,chip603	D12L	Not used	
	Resistor,chip603	D12H	Not used	
	Resistor,chip603	DSWL	Not used	
	Resistor,chip603	DSWH	Not used	
	Resistor,chip603	B25L	10 Kohm	14103
	Resistor,chip603	B25H	10 Kohm	14103
	Resistor,chip603	B12L	10 Kohm	14103
	Resistor,chip603	B12H	10 Kohm	14103
	Resistor,chip603	BSWL	10 Kohm	14103

p. 3 of 54 PC. Board No. 790-7

Copyright © 2004

Partlist for Radioboard TRX3001D/TRDX3001D Date 07-03-2006
Drawing No. 0-3008-03-8 Unit No. 3000

Component	Description		Value	Niros No.
	Resistor,chip603	BSWH	10 Kohm	14103
R132	Resistor,chip603		820 Kohm	14824
R133	Resistor,chip603		27 Kohm	14273
R134	Resistor,chip805		2,2 Ohm	13229
R135	Resistor,chip805		2,2 Ohm	13229
R136	Resistor,chip603	S25L	1,8 Kohm	14182
	Resistor,chip603	S25H	1,8 Kohm	14182
	Resistor,chip603	S12L	1,8 Kohm	14182
	Resistor,chip603	S12H	1,8 Kohm	14182
	Resistor,chip603	SSWL	1,8 Kohm	14182
	Resistor,chip603	SSWH	1,8 Kohm	14182
	Resistor,chip603	D25L	Not used	
	Resistor,chip603	D25H	Not used	
	Resistor,chip603	D12L	Not used	
	Resistor,chip603	D12H	Not used	
	Resistor,chip603	DSWL	Not used	
	Resistor,chip603	DSWH	Not used	
	Resistor,chip603	B25L	1,8 Kohm	14182
	Resistor,chip603	B25H	1,8 Kohm	14182
	Resistor,chip603	B12L	1,8 Kohm	14182
	Resistor,chip603	B12H	1,8 Kohm	14182
	Resistor,chip603	BSWL	1,8 Kohm	14182
	Resistor,chip603	BSWH	1,8 Kohm	14182
R137	Resistor,chip603_1%		150 Kohm	10920
R138	Resistor,chip603_1%		464 Kohm	10911
R201	Resistor,chip603		1,8 Kohm	14182
R202	Resistor,chip603		100 Kohm	14104
R203	Resistor,chip603	S25L	150 Kohm	14154
	Resistor,chip603	S25H	150 Kohm	14154
	Resistor,chip603	S12L	33 Kohm	14333
	Resistor,chip603	S12H	33 Kohm	14333
	Resistor,chip603	SSWL	150 Kohm	14154
	Resistor,chip603	SSWH	150 Kohm	14154
	Resistor,chip603	D25L	150 Kohm	14154
	Resistor,chip603	D25H	150 Kohm	14154
	Resistor,chip603	D12L	33 Kohm	14333
	Resistor,chip603	D12H	33 Kohm	14333
	Resistor,chip603	DSWL	150 Kohm	14154
	Resistor,chip603	DSWH	150 Kohm	14154
	Resistor,chip603	B25L	150 Kohm	14154
	Resistor,chip603	B25H	150 Kohm	14154
	Resistor,chip603	B12L	33 Kohm	14333
	Resistor,chip603	B12H	33 Kohm	14333
	Resistor,chip603	BSWL	150 Kohm	14154
	Resistor,chip603	BSWH	150 Kohm	14154
R204	Resistor,chip603		1,2 Kohm	14122
R205	Resistor,chip603		220 Ohm	14221
R206	Resistor,chip402		100 Kohm	111003
R207	Resistor,chip603		15 Ohm	14150
R208	Resistor,chip603		10 Ohm	14100

p. 4 of 54 PC. Board No. 790-7

Copyright © 2004

Partlist for Radioboard TRX3001D/TRDX3001D Date 07-03-2006
Drawing No. 0-3008-03-8 Unit No. 3000

Component	Description		Value	Niros No.
R209	Resistor,chip603		100 Ohm	14101
R210	Resistor,chip603		10 Ohm	14100
R211	Resistor,chip603		100 Kohm	14104
R212	Resistor,chip603		5,1 Kohm	14512
R213	Resistor,chip603		100 Ohm	14101
R214	Resistor,chip603		4,7 Kohm	14472
R215	Resistor,chip603		1 Kohm	14102
R216	Resistor,chip603		270 Ohm	14271
R217	Resistor,chip603		68 Ohm	14680
R218	Resistor,chip603		1,5 Kohm	14152
R219	Resistor,chip603		220 Ohm	14221
R220	Resistor,chip603		22 Kohm	14223
R221	Resistor,chip603		8,2 Kohm	14822
R222	Resistor,chip603		2,2 Kohm	14222
R223	Resistor,chip603		150 Ohm	14151
R234	Resistor,chip603		1 Kohm	14102
R235	Resistor,chip603		1 Kohm	14102
R236	Resistor,chip603		1 Kohm	14102
R237	Resistor,chip603	S25L	Not used	
	Resistor,chip603	S25H	Not used	
	Resistor,chip603	S12L	Not used	
	Resistor,chip603	S12H	Not used	
	Resistor,chip603	SSWL	2,2 Kohm	14222
	Resistor,chip603	SSWH	2,2 Kohm	14222
	Resistor,chip603	D25L	Not used	
	Resistor,chip603	D25H	Not used	
	Resistor,chip603	D12L	Not used	
	Resistor,chip603	D12H	Not used	
	Resistor,chip603	DSWL	2,2 Kohm	14222
	Resistor,chip603	DSWH	2,2 Kohm	14222
	Resistor,chip603	B25L	Not used	
	Resistor,chip603	B25H	Not used	
	Resistor,chip603	B12L	Not used	
	Resistor,chip603	B12H	Not used	
	Resistor,chip603	BSWL	2,2 Kohm	14222
	Resistor,chip603	BSWH	2,2 Kohm	14222
R238	Resistor,chip603		6,8 Kohm	14682
R239	Resistor,chip603		Not used	
R240	Resistor,chip603		Not used	
R241	Resistor,chip603		Not used	
R242	Resistor,chip603		Not used	
R243	Resistor,chip603	S25L	10 Kohm	14103
	Resistor,chip603	S25H	12 Kohm	14123
	Resistor,chip603	S12L	10 Kohm	14103
	Resistor,chip603	S12H	12 Kohm	14123
	Resistor,chip603	SSWL	10 Kohm	14103
	Resistor,chip603	SSWH	12 Kohm	14123
	Resistor,chip603	D25L	10 Kohm	14103

p. 5 of 54 PC. Board No. 790-7

Copyright © 2004

Partlist for Radioboard TRX3001D/TRDX3001D Date 07-03-2006
Drawing No. 0-3008-03-8 Unit No. 3000

Component	Description	Value	Niros No.
	Resistor,chip603 D25H	12 Kohm	14123
	Resistor,chip603 D12L	10 Kohm	14103
	Resistor,chip603 D12H	12 Kohm	14123
	Resistor,chip603 DSWL	10 Kohm	14103
	Resistor,chip603 DSWH	12 Kohm	14123
	Resistor,chip603 B25L	10 Kohm	14103
	Resistor,chip603 B25H	12 Kohm	14123
	Resistor,chip603 B12L	10 Kohm	14103
	Resistor,chip603 B12H	12 Kohm	14123
	Resistor,chip603 BSWL	10 Kohm	14103
	Resistor,chip603 BSWH	12 Kohm	14123
R244	Resistor,chip603	1,5 Mohm	14155
R245	Resistor,chip603	1,5 Mohm	14155
R246	Resistor,chip603	Not used	
R247	Resistor,chip603	100 Ohm	14101
R248	Resistor,chip603	Not used	
R249	Resistor,chip603	1 Kohm	14102
R250	Resistor,chip603	100 Ohm	14101
R251	Resistor,chip603	470 Kohm	14474
R252	Resistor,chip603	56 Kohm	14563
R253	Resistor,chip603	100 Kohm	14104
R255	Resistor,chip603	4,7 Kohm	14472
R256	Resistor,chip603	1 Kohm	14102
R257	Resistor,chip603	1 Kohm	14102
R258	Resistor,chip603	1 Kohm	14102
R259	Resistor,chip603	1,5 Kohm	14152
R260	Resistor,chip603	6,8 Kohm	14682
R261	Resistor,chip603	12 Kohm	14123
R262	Resistor,chip603	220 Ohm	14221
R263	Resistor,chip603	100 Kohm	14104
R264	Resistor,chip603	0 Ohm	14000
R301	Resistor,chip603	Not used	
R302	Resistor,chip603	Not used	
R303	Resistor,chip603	Not used	
R304	Resistor,chip603	10 Kohm	14103
R305	Resistor,chip603	22 Kohm	14223
R306	Resistor,chip603	100 Ohm	14101
R307	Resistor,chip603	100 Ohm	14101
R308	Resistor,chip603	220 Kohm	14224
R309	Resistor,chip603	56 Kohm	14563
R310	Resistor,chip603	100 Kohm	14104
R311	Resistor,chip603	220 Ohm	14221
R312	Resistor,chip603	100 Kohm	14104
R313	Resistor,chip603	1 Kohm	14102
R314	Resistor,chip603	1 Kohm	14102
R315	Resistor,chip603	1 Kohm	14102

p. 6 of 54 PC. Board No. 790-7

Copyright © 2004

Partlist for Radioboard TRX3001D/TRDX3001D Date 07-03-2006
Drawing No. 0-3008-03-8 Unit No. 3000

Component	Description		Value	Niros No.
R316	Resistor,chip603		Not used	
R317	Resistor,ntc		Not used	
R318	Resistor,chip603		Not used	
R319	Resistor,chip603		Not used	
R320	Resistor,chip603		Not used	
R321	Resistor,chip603		Not used	
R322	Resistor,chip603		Not used	
R323	Resistor,chip603		Not used	
R324	Resistor,chip603		100 Kohm	14104
R325	Resistor,ntc		Not used	
R326	Resistor,chip603		Not used	
R327	Resistor,chip603		Not used	
R328	Resistor,chip603		Not used	
R329	Resistor,chip603		100 Kohm	14104
R330	Resistor,chip603		Not used	
R331	Resistor,chip603		4,7 Kohm	14472
R332	Resistor,chip603		47 Kohm	14473
R333	Resistor,chip603		1,5 Kohm	14152
R334	Resistor,chip603		2,2 Kohm	14222
R335	Resistor,chip603		100 Ohm	14101
R336	Resistor,chip603		680 Ohm	14681
R337	Resistor,chip603		150 Ohm	14151
R338	Resistor,chip603		8,2 Kohm	14822
R339	Resistor,chip603		2,2 Kohm	14222
R340	Resistor,chip603		10 Ohm	14100
R341	Resistor,chip603		15 Ohm	14150
R342	Resistor,chip603		220 Ohm	14221
R343	Resistor,chip603		1 Kohm	14102
R344	Resistor,chip603		100 Kohm	14104
R345	Resistor,chip603		2,7 Kohm	14272
R346	Resistor,chip603		680 Kohm	14684
R347	Resistor,chip603		10 Ohm	14100
R348	Resistor,chip603		47 Ohm	14470
R349	Resistor,chip603		220 Ohm	14221
R350	Resistor,chip603		2,7 Kohm	14272
R351	Resistor,chip603		220 Ohm	14221
R352	Resistor,chip603		150 Kohm	14154
R354	Resistor,chip603	S25L	10 Kohm	14103
	Resistor,chip603	S25H	10 Kohm	14103
	Resistor,chip603	S12L	10 Kohm	14103
	Resistor,chip603	S12H	10 Kohm	14103
	Resistor,chip603	SSWL	10 Kohm	14103
	Resistor,chip603	SSWH	10 Kohm	14103
	Resistor,chip603	D25L	Not used	
	Resistor,chip603	D25H	Not used	
	Resistor,chip603	D12L	Not used	

p. 7 of 54 PC. Board No. 790-7

Copyright © 2004

Partlist for Radioboard TRX3001D/TRDX3001D Date 07-03-2006
Drawing No. 0-3008-03-8 Unit No. 3000

Component	Description		Value	Niros No.
	Resistor,chip603	D12H	Not used	
	Resistor,chip603	DSWL	Not used	
	Resistor,chip603	DSWH	Not used	
	Resistor,chip603	B25L	10 Kohm	14103
	Resistor,chip603	B25H	10 Kohm	14103
	Resistor,chip603	B12L	10 Kohm	14103
	Resistor,chip603	B12H	10 Kohm	14103
	Resistor,chip603	BSWL	10 Kohm	14103
	Resistor,chip603	BSWH	10 Kohm	14103
R355	Resistor,chip603	S25L	47 Kohm	14473
	Resistor,chip603	S25H	47 Kohm	14473
	Resistor,chip603	S12L	47 Kohm	14473
	Resistor,chip603	S12H	47 Kohm	14473
	Resistor,chip603	SSWL	47 Kohm	14473
	Resistor,chip603	SSWH	47 Kohm	14473
	Resistor,chip603	D25L	Not used	
	Resistor,chip603	D25H	Not used	
	Resistor,chip603	D12L	Not used	
	Resistor,chip603	D12H	Not used	
	Resistor,chip603	DSWL	Not used	
	Resistor,chip603	DSWH	Not used	
	Resistor,chip603	B25L	47 Kohm	14473
	Resistor,chip603	B25H	47 Kohm	14473
	Resistor,chip603	B12L	47 Kohm	14473
	Resistor,chip603	B12H	47 Kohm	14473
	Resistor,chip603	BSWL	47 Kohm	14473
	Resistor,chip603	BSWH	47 Kohm	14473
R356	Resistor,chip603		22 Ohm	14220
R401	Resistor,chip603		47 Kohm	14473
R402	Resistor,chip1206		100 Kohm	12104
R403	Resistor,chip1206		100 Kohm	12104
R404	Resistor,chip603		3,9 Kohm	14392
R405	Resistor,chip603		4,7 Kohm	14472
R406	Resistor,chip603		4,7 Kohm	14472
R407	Resistor,chip603		47 Ohm	14470
R408	Resistor,chip603		0 Ohm	14000
R409	Resistor,chip603		680 Ohm	14681
R410	Resistor,chip1206		100 Kohm	12104
R411	Resistor,chip1206		100 Kohm	12104
R412	Resistor,chip603	S25L	Not used	
	Resistor,chip603	S25H	Not used	
	Resistor,chip603	S12L	Not used	
	Resistor,chip603	S12H	Not used	
	Resistor,chip603	SSWL	6,8 Kohm	14682
	Resistor,chip603	SSWH	6,8 Kohm	14682
	Resistor,chip603	D25L	Not used	
	Resistor,chip603	D25H	Not used	
	Resistor,chip603	D12L	Not used	
	Resistor,chip603	D12H	Not used	

p. 8 of 54 PC. Board No. 790-7

Copyright © 2004

Partlist for Radioboard TRX3001D/TRDX3001D Date 07-03-2006
Drawing No. 0-3008-03-8 Unit No. 3000

Component	Description		Value	Niros No.
	Resistor,chip603	DSWL	6,8 Kohm	14682
	Resistor,chip603	DSWH	6,8 Kohm	14682
	Resistor,chip603	B25L	Not used	
	Resistor,chip603	B25H	Not used	
	Resistor,chip603	B12L	Not used	
	Resistor,chip603	B12H	Not used	
	Resistor,chip603	BSWL	6,8 Kohm	14682
	Resistor,chip603	BSWH	6,8 Kohm	14682
R413	Resistor,chip603	S25L	Not used	
	Resistor,chip603	S25H	Not used	
	Resistor,chip603	S12L	Not used	
	Resistor,chip603	S12H	Not used	
	Resistor,chip603	SSWL	2,2 Kohm	14222
	Resistor,chip603	SSWH	2,2 Kohm	14222
	Resistor,chip603	D25L	Not used	
	Resistor,chip603	D25H	Not used	
	Resistor,chip603	D12L	Not used	
	Resistor,chip603	D12H	Not used	
	Resistor,chip603	DSWL	2,2 Kohm	14222
	Resistor,chip603	DSWH	2,2 Kohm	14222
	Resistor,chip603	B25L	Not used	
	Resistor,chip603	B25H	Not used	
	Resistor,chip603	B12L	Not used	
	Resistor,chip603	B12H	Not used	
	Resistor,chip603	BSWL	2,2 Kohm	14222
	Resistor,chip603	BSWH	2,2 Kohm	14222
R414	Resistor,chip603	S25L	Not used	
	Resistor,chip603	S25H	Not used	
	Resistor,chip603	S12L	Not used	
	Resistor,chip603	S12H	Not used	
	Resistor,chip603	SSWL	470 Ohm	14471
	Resistor,chip603	SSWH	470 Ohm	14471
	Resistor,chip603	D25L	Not used	
	Resistor,chip603	D25H	Not used	
	Resistor,chip603	D12L	Not used	
	Resistor,chip603	D12H	Not used	
	Resistor,chip603	DSWL	470 Ohm	14471
	Resistor,chip603	DSWH	470 Ohm	14471
	Resistor,chip603	B25L	Not used	
	Resistor,chip603	B25H	Not used	
	Resistor,chip603	B12L	Not used	
	Resistor,chip603	B12H	Not used	
	Resistor,chip603	BSWL	470 Ohm	14471
	Resistor,chip603	BSWH	470 Ohm	14471
R415	Resistor,chip603	S25L	Not used	
	Resistor,chip603	S25H	Not used	
	Resistor,chip603	S12L	Not used	
	Resistor,chip603	S12H	Not used	
	Resistor,chip603	SSWL	4,7 Kohm	14472
	Resistor,chip603	SSWH	4,7 Kohm	14472

p. 9 of 54 PC. Board No. 790-7

Copyright © 2004

Partlist for Radioboard TRX3001D/TRDX3001D Date 07-03-2006
Drawing No. 0-3008-03-8 Unit No. 3000

Component	Description	Value	Niros No.
	Resistor,chip603 D25L	Not used	
	Resistor,chip603 D25H	Not used	
	Resistor,chip603 D12L	Not used	
	Resistor,chip603 D12H	Not used	
	Resistor,chip603 DSWL	4,7 Kohm	14472
	Resistor,chip603 DSWH	4,7 Kohm	14472
	Resistor,chip603 B25L	Not used	
	Resistor,chip603 B25H	Not used	
	Resistor,chip603 B12L	Not used	
	Resistor,chip603 B12H	Not used	
	Resistor,chip603 BSWL	4,7 Kohm	14472
	Resistor,chip603 BSWH	4,7 Kohm	14472
R416	Resistor,chip603 S25L	Not used	
	Resistor,chip603 S25H	Not used	
	Resistor,chip603 S12L	Not used	
	Resistor,chip603 S12H	Not used	
	Resistor,chip603 SSWL	390 Ohm	14391
	Resistor,chip603 SSWH	390 Ohm	14391
	Resistor,chip603 D25L	Not used	
	Resistor,chip603 D25H	Not used	
	Resistor,chip603 D12L	Not used	
	Resistor,chip603 D12H	Not used	
	Resistor,chip603 DSWL	390 Ohm	14391
	Resistor,chip603 DSWH	390 Ohm	14391
	Resistor,chip603 B25L	Not used	
	Resistor,chip603 B25H	Not used	
	Resistor,chip603 B12L	Not used	
	Resistor,chip603 B12H	Not used	
	Resistor,chip603 BSWL	390 Ohm	14391
	Resistor,chip603 BSWH	390 Ohm	14391
R417	Resistor,chip603 S25L	Not used	
	Resistor,chip603 S25H	Not used	
	Resistor,chip603 S12L	Not used	
	Resistor,chip603 S12H	Not used	
	Resistor,chip603 SSWL	1,8 Kohm	14182
	Resistor,chip603 SSWH	1,8 Kohm	14182
	Resistor,chip603 D25L	Not used	
	Resistor,chip603 D25H	Not used	
	Resistor,chip603 D12L	Not used	
	Resistor,chip603 D12H	Not used	
	Resistor,chip603 DSWL	1,8 Kohm	14182
	Resistor,chip603 DSWH	1,8 Kohm	14182
	Resistor,chip603 B25L	Not used	
	Resistor,chip603 B25H	Not used	
	Resistor,chip603 B12L	Not used	
	Resistor,chip603 B12H	Not used	
	Resistor,chip603 BSWL	1,8 Kohm	14182
	Resistor,chip603 BSWH	1,8 Kohm	14182
R418	Resistor,chip603 S25L	Not used	
	Resistor,chip603 S25H	Not used	

p. 10 of 54 PC. Board No. 790-7

Copyright © 2004

Partlist for Radioboard TRX3001D/TRDX3001D Date 07-03-2006
Drawing No. 0-3008-03-8 Unit No. 3000

Component	Description		Value	Niros No.
	Resistor,chip603	S12L	Not used	
	Resistor,chip603	S12H	Not used	
	Resistor,chip603	SSWL	330 Ohm	14331
	Resistor,chip603	SSWH	330 Ohm	14331
	Resistor,chip603	D25L	Not used	
	Resistor,chip603	D25H	Not used	
	Resistor,chip603	D12L	Not used	
	Resistor,chip603	D12H	Not used	
	Resistor,chip603	DSWL	330 Ohm	14331
	Resistor,chip603	DSWH	330 Ohm	14331
	Resistor,chip603	B25L	Not used	
	Resistor,chip603	B25H	Not used	
	Resistor,chip603	B12L	Not used	
	Resistor,chip603	B12H	Not used	
	Resistor,chip603	BSWL	330 Ohm	14331
	Resistor,chip603	BSWH	330 Ohm	14331
R419	Resistor,chip603	S25L	Not used	
	Resistor,chip603	S25H	Not used	
	Resistor,chip603	S12L	Not used	
	Resistor,chip603	S12H	Not used	
	Resistor,chip603	SSWL	1,5 Kohm	14152
	Resistor,chip603	SSWH	1,5 Kohm	14152
	Resistor,chip603	D25L	Not used	
	Resistor,chip603	D25H	Not used	
	Resistor,chip603	D12L	Not used	
	Resistor,chip603	D12H	Not used	
	Resistor,chip603	DSWL	1,5 Kohm	14152
	Resistor,chip603	DSWH	1,5 Kohm	14152
	Resistor,chip603	B25L	Not used	
	Resistor,chip603	B25H	Not used	
	Resistor,chip603	B12L	Not used	
	Resistor,chip603	B12H	Not used	
	Resistor,chip603	BSWL	1,5 Kohm	14152
	Resistor,chip603	BSWH	1,5 Kohm	14152
R420	Resistor,chip603	S25L	Not used	
	Resistor,chip603	S25H	Not used	
	Resistor,chip603	S12L	Not used	
	Resistor,chip603	S12H	Not used	
	Resistor,chip603	SSWL	1,8 Kohm	14182
	Resistor,chip603	SSWH	1,8 Kohm	14182
	Resistor,chip603	D25L	Not used	
	Resistor,chip603	D25H	Not used	
	Resistor,chip603	D12L	Not used	
	Resistor,chip603	D12H	Not used	
	Resistor,chip603	DSWL	1,8 Kohm	14182
	Resistor,chip603	DSWH	1,8 Kohm	14182
	Resistor,chip603	B25L	Not used	
	Resistor,chip603	B25H	Not used	
	Resistor,chip603	B12L	Not used	
	Resistor,chip603	B12H	Not used	
	Resistor,chip603	BSWL	1,8 Kohm	14182

Copyright © 2004

Partlist for Radioboard TRX3001D/TRDX3001D Date 07-03-2006
Drawing No. 0-3008-03-8 Unit No. 3000

Component	Description		Value	Niros No.
	Resistor,chip603	BSWH	1,8 Kohm	14182
R421	Resistor,chip603	S25L	Not used	
	Resistor,chip603	S25H	Not used	
	Resistor,chip603	S12L	Not used	
	Resistor,chip603	S12H	Not used	
	Resistor,chip603	SSWL	680 Ohm	14681
	Resistor,chip603	SSWH	680 Ohm	14681
	Resistor,chip603	D25L	Not used	
	Resistor,chip603	D25H	Not used	
	Resistor,chip603	D12L	Not used	
	Resistor,chip603	D12H	Not used	
	Resistor,chip603	DSWL	680 Ohm	14681
	Resistor,chip603	DSWH	680 Ohm	14681
	Resistor,chip603	B25L	Not used	
	Resistor,chip603	B25H	Not used	
	Resistor,chip603	B12L	Not used	
	Resistor,chip603	B12H	Not used	
	Resistor,chip603	BSWL	680 Ohm	14681
	Resistor,chip603	BSWH	680 Ohm	14681
R422	Resistor,chip603	S25L	1 Kohm	14102
	Resistor,chip603	S25H	1 Kohm	14102
	Resistor,chip603	S12L	1,5 Kohm	14152
	Resistor,chip603	S12H	1,5 Kohm	14152
	Resistor,chip603	SSWL	10 Kohm	14103
	Resistor,chip603	SSWH	10 Kohm	14103
	Resistor,chip603	D25L	1 Kohm	14102
	Resistor,chip603	D25H	1 Kohm	14102
	Resistor,chip603	D12L	1,5 Kohm	14152
	Resistor,chip603	D12H	1,5 Kohm	14152
	Resistor,chip603	DSWL	10 Kohm	14103
	Resistor,chip603	DSWH	10 Kohm	14103
	Resistor,chip603	B25L	1 Kohm	14102
	Resistor,chip603	B25H	1 Kohm	14102
	Resistor,chip603	B12L	1,5 Kohm	14152
	Resistor,chip603	B12H	1,5 Kohm	14152
	Resistor,chip603	BSWL	10 Kohm	14103
	Resistor,chip603	BSWH	10 Kohm	14103
R423	Resistor,chip603		120 Ohm	14121
R424	Resistor,chip603		68 Ohm	14680
R425	Resistor,chip603		470 Ohm	14471
R426	Resistor,chip603		12 Ohm	14120
R427	Resistor,chip603		470 Ohm	14471
R428	Resistor,chip603		470 Ohm	14471
R429	Resistor,chip603		47 Ohm	14470
R430	Resistor,chip603		10 Ohm	14100
R431	Resistor,chip603		10 Ohm	14100
R432	Resistor,chip603		2,2 Kohm	14222
R433	Resistor,chip603		4,7 Kohm	14472
R434	Resistor,chip603	S25L	Not used	

p. 12 of 54 PC. Board No. 790-7

Copyright © 2004

Partlist for Radioboard TRX3001D/TRDX3001D Date 07-03-2006
Drawing No. 0-3008-03-8 Unit No. 3000

Component	Description		Value	Niros No.
	Resistor,chip603	S25H	Not used	
	Resistor,chip603	S12L	Not used	
	Resistor,chip603	S12H	Not used	
	Resistor,chip603	SSWL	100 Kohm	14104
	Resistor,chip603	SSWH	100 Kohm	14104
	Resistor,chip603	D25L	Not used	
	Resistor,chip603	D25H	Not used	
	Resistor,chip603	D12L	Not used	
	Resistor,chip603	D12H	Not used	
	Resistor,chip603	DSWL	100 Kohm	14104
	Resistor,chip603	DSWH	100 Kohm	14104
	Resistor,chip603	B25L	Not used	
	Resistor,chip603	B25H	Not used	
	Resistor,chip603	B12L	Not used	
	Resistor,chip603	B12H	Not used	
	Resistor,chip603	BSWL	100 Kohm	14104
	Resistor,chip603	BSWL	100 Kohm	14104
R435	Resistor,chip603	S25L	Not used	
	Resistor,chip603	S25H	Not used	
	Resistor,chip603	S12L	Not used	
	Resistor,chip603	S12H	Not used	
	Resistor,chip603	SSWL	100 Kohm	14104
	Resistor,chip603	SSWH	100 Kohm	14104
	Resistor,chip603	D25L	Not used	
	Resistor,chip603	D25H	Not used	
	Resistor,chip603	D12L	Not used	
	Resistor,chip603	D12H	Not used	
	Resistor,chip603	DSWL	100 Kohm	14104
	Resistor,chip603	DSWH	100 Kohm	14104
	Resistor,chip603	B25L	Not used	
	Resistor,chip603	B25H	Not used	
	Resistor,chip603	B12L	Not used	
	Resistor,chip603	B12H	Not used	
	Resistor,chip603	BSWL	100 Kohm	14104
	Resistor,chip603	BSWH	100 Kohm	14104
R436	Resistor,chip603	S25L	820 Ohm	14821
	Resistor,chip603	S25H	820 Ohm	14821
	Resistor,chip603	S12L	Not used	
	Resistor,chip603	S12H	Not used	
	Resistor,chip603	SSWL	Not used	
	Resistor,chip603	SSWH	Not used	
	Resistor,chip603	D25L	820 Ohm	14821
	Resistor,chip603	D25H	820 Ohm	14821
	Resistor,chip603	D12L	Not used	
	Resistor,chip603	D12H	Not used	
	Resistor,chip603	DSWL	Not used	
	Resistor,chip603	DSWH	Not used	
	Resistor,chip603	B25L	Not used	
	Resistor,chip603	B25H	Not used	
	Resistor,chip603	B12L	Not used	
	Resistor,chip603	B12H	Not used	

p. 13 of 54 PC. Board No. 790-7

Copyright © 2004

Partlist for Radioboard TRX3001D/TRDX3001D Date 07-03-2006
Drawing No. 0-3008-03-8 Unit No. 3000

Component	Description		Value	Niros No.
	Resistor,chip603	BSWL	820 Ohm	14821
	Resistor,chip603	BSWH	820 Ohm	14821
R437	Resistor,chip603	S25L	Not used	
	Resistor,chip603	S25H	Not used	
	Resistor,chip603	S12L	330 Ohm	14331
	Resistor,chip603	S12H	330 Ohm	14331
	Resistor,chip603	SSWL	Not used	
	Resistor,chip603	SSWH	Not used	
	Resistor,chip603	D25L	Not used	
	Resistor,chip603	D25H	Not used	
	Resistor,chip603	D12L	330 Ohm	14331
	Resistor,chip603	D12H	330 Ohm	14331
	Resistor,chip603	DSWL	Not used	
	Resistor,chip603	DSWH	Not used	
	Resistor,chip603	B25L	Not used	
	Resistor,chip603	B25H	Not used	
	Resistor,chip603	B12L	330 Ohm	14331
	Resistor,chip603	B12H	330 Ohm	14331
	Resistor,chip603	BSWL	Not used	
	Resistor,chip603	BSWH	Not used	
R501	Resistor,ptc		0.5 A	83364
R502	Resistor,chip603		15 Kohm	14153
R503	Resistor,chip1206		390 Ohm	12391
R504	Resistor,chip1206		390 Ohm	12391
R505	Resistor,chip603		100 Kohm	14104
R506	Resistor,chip603		68 Kohm	14683
R507	Resistor,chip603		150 Kohm	14154
R508	Resistor,chip603		390 Kohm	14394
R509	Resistor,chip603		1 Mohm	14105
R510	Resistor,chip603		680 Ohm	14681
R511	Resistor,chip603_1%		1 Kohm	10926
R512	Resistor,chip603_1%		4,53 Kohm	10927
R513	Resistor,chip603		47 Ohm	14470
R514	Resistor,chip603	S25L	Not used	
	Resistor,chip603	S25H	Not used	
	Resistor,chip603	S12L	Not used	
	Resistor,chip603	S12H	Not used	
	Resistor,chip603	SSWL	470 Ohm	14471
	Resistor,chip603	SSWH	470 Ohm	14471
	Resistor,chip603	D25L	Not used	
	Resistor,chip603	D25H	Not used	
	Resistor,chip603	D12L	Not used	
	Resistor,chip603	D12H	Not used	
	Resistor,chip603	DSWL	470 Ohm	14471
	Resistor,chip603	DSWH	470 Ohm	14471
	Resistor,chip603	B25L	Not used	
	Resistor,chip603	B25H	Not used	
	Resistor,chip603	B12L	Not used	
	Resistor,chip603	B12H	Not used	
	Resistor,chip603	BSWL	470 Ohm	14471

p. 14 of 54 PC. Board No. 790-7

Copyright © 2004

Partlist for Radioboard TRX3001D/TRDX3001D Date 07-03-2006
Drawing No. 0-3008-03-8 Unit No. 3000

Component	Description		Value	Niros No.
	Resistor,chip603	BSWH	470 Ohm	14471
R515	Resistor,chip603	S25L	Not used	
	Resistor,chip603	S25H	Not used	
	Resistor,chip603	S12L	Not used	
	Resistor,chip603	S12H	Not used	
	Resistor,chip603	SSWL	6,8 Kohm	14682
	Resistor,chip603	SSWH	6,8 Kohm	14682
	Resistor,chip603	D25L	Not used	
	Resistor,chip603	D25H	Not used	
	Resistor,chip603	D12L	Not used	
	Resistor,chip603	D12H	Not used	
	Resistor,chip603	DSWL	6,8 Kohm	14682
	Resistor,chip603	DSWH	6,8 Kohm	14682
	Resistor,chip603	B25L	Not used	
	Resistor,chip603	B25H	Not used	
	Resistor,chip603	B12L	Not used	
	Resistor,chip603	B12H	Not used	
	Resistor,chip603	BSWL	6,8 Kohm	14682
	Resistor,chip603	BSWH	6,8 Kohm	14682
R516	Resistor,chip603	S25L	Not used	
	Resistor,chip603	S25H	Not used	
	Resistor,chip603	S12L	Not used	
	Resistor,chip603	S12H	Not used	
	Resistor,chip603	SSWL	6,8 Kohm	14682
	Resistor,chip603	SSWH	6,8 Kohm	14682
	Resistor,chip603	D25L	Not used	
	Resistor,chip603	D25H	Not used	
	Resistor,chip603	D12L	Not used	
	Resistor,chip603	D12H	Not used	
	Resistor,chip603	DSWL	6,8 Kohm	14682
	Resistor,chip603	DSWH	6,8 Kohm	14682
	Resistor,chip603	B25L	Not used	
	Resistor,chip603	B25H	Not used	
	Resistor,chip603	B12L	Not used	
	Resistor,chip603	B12H	Not used	
	Resistor,chip603	BSWL	6,8 Kohm	14682
	Resistor,chip603	BSWH	6,8 Kohm	14682
R517	Resistor,chip603	S25L	Not used	
	Resistor,chip603	S25H	Not used	
	Resistor,chip603	S12L	Not used	
	Resistor,chip603	S12H	Not used	
	Resistor,chip603	SSWL	6,8 Kohm	14682
	Resistor,chip603	SSWH	6,8 Kohm	14682
	Resistor,chip603	D25L	Not used	
	Resistor,chip603	D25H	Not used	
	Resistor,chip603	D12L	Not used	
	Resistor,chip603	D12H	Not used	
	Resistor,chip603	DSWL	6,8 Kohm	14682
	Resistor,chip603	DSWH	6,8 Kohm	14682
	Resistor,chip603	B25L	Not used	
	Resistor,chip603	B25H	Not used	

p. 15 of 54 PC. Board No. 790-7

Copyright © 2004

Partlist for Radioboard TRX3001D/TRDX3001D Date 07-03-2006
Drawing No. 0-3008-03-8 Unit No. 3000

Component	Description		Value	Niros No.
	Resistor,chip603	B12L	Not used	
	Resistor,chip603	B12H	Not used	
	Resistor,chip603	BSWL	6,8 Kohm	14682
	Resistor,chip603	BSWH	6,8 Kohm	14682
R518	Resistor,chip603	S25L	Not used	
	Resistor,chip603	S25H	Not used	
	Resistor,chip603	S12L	Not used	
	Resistor,chip603	S12H	Not used	
	Resistor,chip603	SSWL	6,8 Kohm	14682
	Resistor,chip603	SSWH	6,8 Kohm	14682
	Resistor,chip603	D25L	Not used	
	Resistor,chip603	D25H	Not used	
	Resistor,chip603	D12L	Not used	
	Resistor,chip603	D12H	Not used	
	Resistor,chip603	DSWL	6,8 Kohm	14682
	Resistor,chip603	DSWH	6,8 Kohm	14682
	Resistor,chip603	B25L	Not used	
	Resistor,chip603	B25H	Not used	
	Resistor,chip603	B12L	Not used	
	Resistor,chip603	B12H	Not used	
	Resistor,chip603	BSWL	6,8 Kohm	14682
	Resistor,chip603	BSWH	6,8 Kohm	14682
R519	Resistor,chip603	S25L	Not used	
	Resistor,chip603	S25H	Not used	
	Resistor,chip603	S12L	Not used	
	Resistor,chip603	S12H	Not used	
	Resistor,chip603	SSWL	6,8 Kohm	14682
	Resistor,chip603	SSWH	6,8 Kohm	14682
	Resistor,chip603	D25L	Not used	
	Resistor,chip603	D25H	Not used	
	Resistor,chip603	D12L	Not used	
	Resistor,chip603	D12H	Not used	
	Resistor,chip603	DSWL	6,8 Kohm	14682
	Resistor,chip603	DSWH	6,8 Kohm	14682
	Resistor,chip603	B25L	Not used	
	Resistor,chip603	B25H	Not used	
	Resistor,chip603	B12L	Not used	
	Resistor,chip603	B12H	Not used	
	Resistor,chip603	BSWL	6,8 Kohm	14682
	Resistor,chip603	BSWH	6,8 Kohm	14682
R520	Resistor,chip603	S25L	Not used	
	Resistor,chip603	S25H	Not used	
	Resistor,chip603	S12L	Not used	
	Resistor,chip603	S12H	Not used	
	Resistor,chip603	SSWL	470 Ohm	14471
	Resistor,chip603	SSWH	470 Ohm	14471
	Resistor,chip603	D25L	Not used	
	Resistor,chip603	D25H	Not used	
	Resistor,chip603	D12L	Not used	
	Resistor,chip603	D12H	Not used	
	Resistor,chip603	DSWL	470 Ohm	14471

Copyright © 2004

Partlist for Radioboard TRX3001D/TRDX3001D Date 07-03-2006
Drawing No. 0-3008-03-8 Unit No. 3000

Component	Description		Value	Niros No.
	Resistor,chip603	DSWH	470 Ohm	14471
	Resistor,chip603	B25L	Not used	
	Resistor,chip603	B25H	Not used	
	Resistor,chip603	B12L	Not used	
	Resistor,chip603	B12H	Not used	
	Resistor,chip603	BSWL	470 Ohm	14471
	Resistor,chip603	BSWH	470 Ohm	14471
R521	Resistor,chip603	S25L	Not used	
	Resistor,chip603	S25H	Not used	
	Resistor,chip603	S12L	Not used	
	Resistor,chip603	S12H	Not used	
	Resistor,chip603	SSWL	6,8 Kohm	14682
	Resistor,chip603	SSWH	6,8 Kohm	14682
	Resistor,chip603	D25L	Not used	
	Resistor,chip603	D25H	Not used	
	Resistor,chip603	D12L	Not used	
	Resistor,chip603	D12H	Not used	
	Resistor,chip603	DSWL	6,8 Kohm	14682
	Resistor,chip603	DSWH	6,8 Kohm	14682
	Resistor,chip603	B25L	Not used	
	Resistor,chip603	B25H	Not used	
	Resistor,chip603	B12L	Not used	
	Resistor,chip603	B12H	Not used	
	Resistor,chip603	BSWL	6,8 Kohm	14682
	Resistor,chip603	BSWH	6,8 Kohm	14682
R522	Resistor,chip603		22 Kohm	14223
R523	Resistor,chip603		47 Ohm	14470
R524	Resistor,chip603		2,2 Kohm	14222
R525	Resistor,chip603		4,7 Kohm	14472
R526	Resistor,chip603		2,2 Kohm	14222
R527	Resistor,chip603		470 Kohm	14474
R528	Resistor,chip603		15 Kohm	14153
R529	Resistor,chip603		1 Mohm	14105
R530	Resistor,chip603		390 Kohm	14394
R531	Resistor,chip603		2,2 Kohm	14222
R532	Resistor,chip603	S25L	6,8 Kohm	14682
	Resistor,chip603	S25H	6,8 Kohm	14682
	Resistor,chip603	S12L	3,3 Kohm	14332
	Resistor,chip603	S12H	3,3 Kohm	14332
	Resistor,chip603	SSWL	6,8 Kohm	14682
	Resistor,chip603	SSWH	6,8 Kohm	14682
	Resistor,chip603	D25L	6,8 Kohm	14682
	Resistor,chip603	D25H	6,8 Kohm	14682
	Resistor,chip603	D12L	3,3 Kohm	14332
	Resistor,chip603	D12H	3,3 Kohm	14332
	Resistor,chip603	DSWL	6,8 Kohm	14682
	Resistor,chip603	DSWH	6,8 Kohm	14682
	Resistor,chip603	B25L	6,8 Kohm	14682
	Resistor,chip603	B25H	6,8 Kohm	14682

p. 17 of 54 PC. Board No. 790-7

Copyright © 2004

Partlist for Radioboard TRX3001D/TRDX3001D Date 07-03-2006
Drawing No. 0-3008-03-8 Unit No. 3000

Component	Description		Value	Niros No.
	Resistor,chip603	B12L	3,3 Kohm	14332
	Resistor,chip603	B12H	3,3 Kohm	14332
	Resistor,chip603	BSWL	6,8 Kohm	14682
	Resistor,chip603	BSWH	6,8 Kohm	14682
R533	Resistor,chip603	S25L	Not used	
	Resistor,chip603	S25H	Not used	
	Resistor,chip603	S12L	Not used	
	Resistor,chip603	S12H	Not used	
	Resistor,chip603	SSWL	1,8 Kohm	14182
	Resistor,chip603	SSWH	1,8 Kohm	14182
	Resistor,chip603	D25L	Not used	
	Resistor,chip603	D25H	Not used	
	Resistor,chip603	D12L	Not used	
	Resistor,chip603	D12H	Not used	
	Resistor,chip603	DSWL	1,8 Kohm	14182
	Resistor,chip603	DSWH	1,8 Kohm	14182
	Resistor,chip603	B25L	Not used	
	Resistor,chip603	B25H	Not used	
	Resistor,chip603	B12L	Not used	
	Resistor,chip603	B12H	Not used	
	Resistor,chip603	BSWL	1,8 Kohm	14182
	Resistor,chip603	BSWH	1,8 Kohm	14182
R534	Resistor,chip603		47 Kohm	14473
R535	Resistor,chip603		1 Mohm	14105
R536	Resistor,chip603		820 Kohm	14824
R537	Resistor,chip603		10 Kohm	14103
R538	Resistor,chip603		10 Kohm	14103
R539	Resistor,chip805		10 Mohm	13106
R540	Resistor,chip603		1,5 Mohm	14155
R541	Resistor,chip603		820 Kohm	14824
R542	Resistor,chip603		1 Mohm	14105
R543	Resistor,chip603		180 Kohm	14184
R544	Resistor,chip603	S25L	0 Ohm	14000
	Resistor,chip603	S25H	0 Ohm	14000
	Resistor,chip603	S12L	0 Ohm	14000
	Resistor,chip603	S12H	0 Ohm	14000
	Resistor,chip603	SSWL	0 Ohm	14000
	Resistor,chip603	SSWH	0 Ohm	14000
	Resistor,chip603	D25L	Not used	
	Resistor,chip603	D25H	Not used	
	Resistor,chip603	D12L	Not used	
	Resistor,chip603	D12H	Not used	
	Resistor,chip603	DSWL	Not used	
	Resistor,chip603	DSWH	Not used	
	Resistor,chip603	B25L	Not used	
	Resistor,chip603	B25H	Not used	
	Resistor,chip603	B12L	Not used	
	Resistor,chip603	B12H	Not used	
	Resistor,chip603	BSWL	Not used	
	Resistor,chip603	BSWH	Not used	

p. 18 of 54 PC. Board No. 790-7

Copyright © 2004

Partlist for Radioboard TRX3001D/TRDX3001D Date 07-03-2006
Drawing No. 0-3008-03-8 Unit No. 3000

Component	Description		Value	Niros No.
C1	Capacitor,chip603		33 nF	21333
C101	Capacitor,chip603		10 nF	21103
C102	Capacitor,chip603		12 pF	21120
C103	Capacitor,chip603		150 pF	21151
C104	Capacitor,chip603		10 nF	21103
C105	Capacitor,chip603		10 nF	21103
C106	Capacitor,chip603		1 nF	21102
C107	Capacitor,chip603		1 nF	21102
C108	Capacitor,chip603		15 pF	21150
C109	Capacitor,chip603		150 pF	21151
C110	Capacitor,chip603		120 pF	21121
C111	Capacitor,chip603	S25L	4,7 pF	21479
	Capacitor,chip603	S25H	Not used	
	Capacitor,chip603	S12L	4,7 pF	21479
	Capacitor,chip603	S12H	Not used	
	Capacitor,chip603	SSWL	4,7 pF	21479
	Capacitor,chip603	SSWH	Not used	
	Capacitor,chip603	D25L	4,7 pF	21479
	Capacitor,chip603	D25H	Not used	
	Capacitor,chip603	D12L	4,7 pF	21479
	Capacitor,chip603	D12H	Not used	
	Capacitor,chip603	DSWL	4,7 pF	21479
	Capacitor,chip603	DSWH	Not used	
	Capacitor,chip603	B25L	4,7 pF	21479
	Capacitor,chip603	B25H	Not used	
	Capacitor,chip603	B12L	4,7 pF	21479
	Capacitor,chip603	B12H	Not used	
	Capacitor,chip603	BSWL	4,7 pF	21479
	Capacitor,chip603	BSWH	Not used	
C112	Capacitor,ctan_e		22 uF/35V	25624
C113	Capacitor,chip603		4,7 nF	21472
C114	Capacitor,chip603		1 nF	21102
C115	Capacitor,chip603	S25L	1 nF	21102
	Capacitor,chip603	S25H	1 nF	21102
	Capacitor,chip603	S12L	1 nF	21102
	Capacitor,chip603	S12H	1 nF	21102
	Capacitor,chip603	SSWL	1 nF	21102
	Capacitor,chip603	SSWH	1 nF	21102
	Capacitor,chip603	D25L	Not used	
	Capacitor,chip603	D25H	Not used	
	Capacitor,chip603	D12L	Not used	
	Capacitor,chip603	D12H	Not used	
	Capacitor,chip603	DSWL	Not used	
	Capacitor,chip603	DSWH	Not used	
	Capacitor,chip603	B25L	1 nF	21102
	Capacitor,chip603	B25H	1 nF	21102
	Capacitor,chip603	B12L	1 nF	21102
	Capacitor,chip603	B12H	1 nF	21102
	Capacitor,chip603	BSWL	1 nF	21102
	Capacitor,chip603	BSWH	1 nF	21102

p. 19 of 54 PC. Board No. 790-7

Copyright © 2004

Partlist for Radioboard TRX3001D/TRDX3001D Date 07-03-2006
Drawing No. 0-3008-03-8 Unit No. 3000

Component	Description	Value	Niros No.
C116	Capacitor,chip603	4,7 nF	21472
C117	Capacitor,ctan_e	22 uF/35V	25624
C118	Capacitor,chip603	100 pF	21101
C119	Capacitor,chip603	1 pF	21109
C120	Capacitor,chip603 S25L	1 nF	21102
	Capacitor,chip603 S25H	1 nF	21102
	Capacitor,chip603 S12L	1 nF	21102
	Capacitor,chip603 S12H	1 nF	21102
	Capacitor,chip603 SSWL	1 nF	21102
	Capacitor,chip603 SSWH	1 nF	21102
	Capacitor,chip603 D25L	Not used	
	Capacitor,chip603 D25H	Not used	
	Capacitor,chip603 D12L	Not used	
	Capacitor,chip603 D12H	Not used	
	Capacitor,chip603 DSWL	Not used	
	Capacitor,chip603 DSWH	,0 nF	
	Capacitor,chip603 B25L	1 nF	21102
	Capacitor,chip603 B25H	1 nF	21102
	Capacitor,chip603 B12L	1 nF	21102
	Capacitor,chip603 B12H	1 nF	21102
	Capacitor,chip603 BSWL	1 nF	21102
	Capacitor,chip603 BSWH	1 nF	21102
C121	Capacitor,chip603 S25L	1 nF	21102
	Capacitor,chip603 S25H	1 nF	21102
	Capacitor,chip603 S12L	1 nF	21102
	Capacitor,chip603 S12H	1 nF	21102
	Capacitor,chip603 SSWL	1 nF	21102
	Capacitor,chip603 SSWH	1 nF	21102
	Capacitor,chip603 D25L	Not used	
	Capacitor,chip603 D25H	Not used	
	Capacitor,chip603 D12L	Not used	
	Capacitor,chip603 D12H	Not used	
	Capacitor,chip603 DSWL	Not used	
	Capacitor,chip603 DSWH	Not used	
	Capacitor,chip603 B25L	1 nF	21102
	Capacitor,chip603 B25H	1 nF	21102
	Capacitor,chip603 B12L	1 nF	21102
	Capacitor,chip603 B12H	1 nF	21102
	Capacitor,chip603 BSWL	1 nF	21102
	Capacitor,chip603 BSWH	1 nF	21102
C122	Capacitor,chip603	Not used	
C123	Capacitor,chip805_pw S25L	5,6 pF	20876
	Capacitor,chip805_pw S25H	6,8 pF	20834
	Capacitor,chip805_pw S12L	5,6 pF	20876
	Capacitor,chip805_pw S12H	6,8 pF	20834
	Capacitor,chip805_pw SSWL	5,6 pF	20876
	Capacitor,chip805_pw SSWL	6,8 pF	20834
	Capacitor,chip805_pw D25L	5,6 pF	20876
	Capacitor,chip805_pw D25H	6,8 pF	20834
	Capacitor,chip805_pw D12L	5,6 pF	20876
	Capacitor,chip805_pw D12H	6,8 pF	20834

p. 20 of 54 PC. Board No. 790-7

Copyright © 2004

Partlist for Radioboard TRX3001D/TRDX3001D Date 07-03-2006
Drawing No. 0-3008-03-8 Unit No. 3000

Component	Description	Value	Niros No.
	Capacitor,chip805_pw DSWL	5,6 pF	20876
	Capacitor,chip805_pw DSWH	6,8 pF	20834
	Capacitor,chip805_pw B25L	5,6 pF	20876
	Capacitor,chip805_pw B25H	6,8 pF	20834
	Capacitor,chip805_pw B12L	5,6 pF	20876
	Capacitor,chip805_pw B12H	6,8 pF	20834
	Capacitor,chip805_pw BSWL	5,6 pF	20876
	Capacitor,chip805_pw BSWH	6,8 pF	20834
C124	Capacitor,chip603_2% S25L	5,6 pF	22569
	Capacitor,chip603_2% S25H	3,3 pF	22339
	Capacitor,chip603_2% S12L	5,6 pF	22569
	Capacitor,chip603_2% S12H	3,3 pF	22339
	Capacitor,chip603_2% SSWL	5,6 pF	22569
	Capacitor,chip603_2% SSWH	3,3 pF	22339
	Capacitor,chip603_2% D25L	5,6 pF	22569
	Capacitor,chip603_2% D25H	3,3 pF	22339
	Capacitor,chip603_2% D12L	5,6 pF	22569
	Capacitor,chip603_2% D12H	3,3 pF	22339
	Capacitor,chip603_2% DSWL	5,6 pF	22569
	Capacitor,chip603_2% DSWH	3,3 pF	22339
	Capacitor,chip603_2% B25L	5,6 pF	22569
	Capacitor,chip603_2% B25H	3,3 pF	22339
	Capacitor,chip603_2% B12L	5,6 pF	22569
	Capacitor,chip603_2% B12H	3,3 pF	22339
	Capacitor,chip603_2% BSWL	5,6 pF	22569
	Capacitor,chip603_2% BSWH	3,3 pF	22339
C125	Capacitor,chip805_pwr	12 pF	20839
C126	Capacitor,chip603_2% S25L	2,2 pF	22229
	Capacitor,chip603_2% S25H	3,3 pF	22339
	Capacitor,chip603_2% S12L	2,2 pF	22229
	Capacitor,chip603_2% S12H	3,3 pF	22339
	Capacitor,chip603_2% SSWL	2,2 pF	22229
	Capacitor,chip603_2% SSWH	3,3 pF	22339
	Capacitor,chip603_2% D25L	2,2 pF	22229
	Capacitor,chip603_2% D25H	3,3 pF	22339
	Capacitor,chip603_2% D12L	2,2 pF	22229
	Capacitor,chip603_2% D12H	3,3 pF	22339
	Capacitor,chip603_2% DSWL	2,2 pF	22229
	Capacitor,chip603_2% DSWH	3,3 pF	22339
	Capacitor,chip603_2% B25L	2,2 pF	22229
	Capacitor,chip603_2% B25H	3,3 pF	22339
	Capacitor,chip603_2% B12L	2,2 pF	22229
	Capacitor,chip603_2% B12H	3,3 pF	22339
	Capacitor,chip603_2% BSWL	2,2 pF	22229
	Capacitor,chip603_2% BSWH	3,3 pF	22339
C127	Capacitor,chip805_pwr	12 pF	20839
C128	Capacitor,chip603_2% S25L	5,6 pF	22569
	Capacitor,chip603_2% S25H	1 pF	22109
	Capacitor,chip603_2% S12L	5,6 pF	22569
	Capacitor,chip603_2% S12H	1 pF	22109

p. 21 of 54 PC. Board No. 790-7

Copyright © 2004

Partlist for Radioboard TRX3001D/TRDX3001D Date 07-03-2006
Drawing No. 0-3008-03-8 Unit No. 3000

Component	Description	Value	Niros No.
	Capacitor,chip603_2% SSWL	5,6 pF	22569
	Capacitor,chip603_2% SSWH	1 pF	22109
	Capacitor,chip603_2% D25L	5,6 pF	22569
	Capacitor,chip603_2% D25H	1 pF	22109
	Capacitor,chip603_2% D12L	5,6 pF	22569
	Capacitor,chip603_2% D12H	1 pF	22109
	Capacitor,chip603_2% DSWL	5,6 pF	22569
	Capacitor,chip603_2% DSWH	1 pF	22109
	Capacitor,chip603_2% B25L	5,6 pF	22569
	Capacitor,chip603_2% B25H	1 pF	22109
	Capacitor,chip603_2% B12L	5,6 pF	22569
	Capacitor,chip603_2% B12H	1 pF	22109
	Capacitor,chip603_2% BSWL	5,6 pF	22569
	Capacitor,chip603_2% BSWH	1 pF	22109
C129	Capacitor,chip603	1 nF	21102
C130	Capacitor,chip603	1 nF	21102
C131	Capacitor,chip603	1 nF	21102
C132	Capacitor,chip603	2,2 nF	21222
C133	Capacitor,chip603	47 nF	21473
C134	Capacitor,chip603_ln	4,7 nF	20803
C135	Capacitor,chip1206	330 nF	20664
C136	Capacitor,chip603	47 nF	21473
C137	Capacitor,ctan_a	6,8 uF/10V	25619
C138	Capacitor,chip1206	330 nF	20664
C139	Capacitor,ctan_c	10 uF/25V	25623
C140	Capacitor,chip1206	330 nF	20664
C141	Capacitor,ctan_c	10 uF/25V	25623
C142	Capacitor,chip603	100 pF	21101
C143	Capacitot,lyt	330 uF/25V	26027
C144	Capacitot,lyt	330 uF/25V	26027
C145	Capacitor,chip603	0,5 pF	21508
C146	Capacitor,chip603 S25L	1 nF	21102
	Capacitor,chip603 S25H	1 nF	21102
	Capacitor,chip603 S12L	1 nF	21102
	Capacitor,chip603 S12H	1 nF	21102
	Capacitor,chip603 SSWL	1 nF	21102
	Capacitor,chip603 SSWH	1 nF	21102
	Capacitor,chip603 D25L	Not used	
	Capacitor,chip603 D25H	Not used	
	Capacitor,chip603 D12L	Not used	
	Capacitor,chip603 D12H	Not used	
	Capacitor,chip603 DSWL	Not used	
	Capacitor,chip603 DSWH	Not used	
	Capacitor,chip603 B25L	1 nF	21102
	Capacitor,chip603 B25H	1 nF	21102
	Capacitor,chip603 B12L	1 nF	21102
	Capacitor,chip603 B12H	1 nF	21102
	Capacitor,chip603 BSWL	1 nF	21102
	Capacitor,chip603 BSWH	1 nF	21102

p. 22 of 54 PC. Board No. 790-7

Copyright © 2004

Partlist for Radioboard TRX3001D/TRDX3001D Date 07-03-2006
Drawing No. 0-3008-03-8 Unit No. 3000

Component	Description		Value	Niros No.
C147	Capacitor,chip603		1 nF	21102
C148	Capacitor,chip603		1 nF	21102
C149	Capacitor,chip603		1 nF	21102
C150	Capacitor,chip603	S25L	100 pF	21101
	Capacitor,chip603	S25H	100 pF	21101
	Capacitor,chip603	S12L	100 pF	21101
	Capacitor,chip603	S12H	100 pF	21101
	Capacitor,chip603	SSWL	100 pF	21101
	Capacitor,chip603	SSWH	100 pF	21101
	Capacitor,chip603	D25L	Not used	
	Capacitor,chip603	D25H	Not used	
	Capacitor,chip603	D12L	Not used	
	Capacitor,chip603	D12H	Not used	
	Capacitor,chip603	DSWL	Not used	
	Capacitor,chip603	DSWH	Not used	
	Capacitor,chip603	B25L	100 pF	21101
	Capacitor,chip603	B25H	100 pF	21101
	Capacitor,chip603	B12L	100 pF	21101
	Capacitor,chip603	B12H	100 pF	21101
	Capacitor,chip603	BSWL	100 pF	21101
	Capacitor,chip603	BSWH	100 pF	21101
C151	Capacitor,chip603		1,8 nF	21182
C152	Capacitor,chip603		1 nF	21102
C153	Capacitor,chip1206		330 nF	20664
C154	Capacitor,chip603		10 nF	21103
C155	Capacitor,chip603		Not used	
C156	Capacitor,chip603		Not used	
C157	Capacitor,chip603		Not used	
C160	Capacitor,chip603		Not used	
C161	Capacitor,chip805_p	S25L	15 pF	20835
	Capacitor,chip805_p	S25H	18 pF	20830
	Capacitor,chip805_p	S12L	15 pF	20835
	Capacitor,chip805_p	S12H	18 pF	20830
	Capacitor,chip805_p	SSWL	15 pF	20835
	Capacitor,chip805_p	SSWH	18 pF	20830
	Capacitor,chip805_p	D25L	15 pF	20835
	Capacitor,chip805_p	D25H	18 pF	20830
	Capacitor,chip805_p	D12L	15 pF	20835
	Capacitor,chip805_p	D12H	18 pF	20830
	Capacitor,chip805_p	DSWL	15 pF	20835
	Capacitor,chip805_p	DSWH	18 pF	20830
	Capacitor,chip805_p	B25L	15 pF	20835
	Capacitor,chip805_p	B25H	18 pF	20830
	Capacitor,chip805_p	B12L	15 pF	20835
	Capacitor,chip805_p	B12H	18 pF	20830
	Capacitor,chip805_p	BSWL	15 pF	20835
	Capacitor,chip805_p	BSWH	18 pF	20830
C162	Capacitor,chip603		Not used	
C163	Capacitor,chip805_pw	S25L	5,6 pF	20876
	Capacitor,chip805_pw	S25H	6,8 pF	20834

p. 23 of 54 PC. Board No. 790-7

Copyright © 2004

Partlist for Radioboard TRX3001D/TRDX3001D Date 07-03-2006
Drawing No. 0-3008-03-8 Unit No. 3000

Component	Description	Value	Niros No.
	Capacitor,chip805_pw S12L	5,6 pF	20876
	Capacitor,chip805_pw S12H	6,8 pF	20834
	Capacitor,chip805_pw SSWL	5,6 pF	20876
	Capacitor,chip805_pw SSWH	6,8 pF	20834
	Capacitor,chip805_pw D25L	5,6 pF	20876
	Capacitor,chip805_pw D25H	6,8 pF	20834
	Capacitor,chip805_pw D12L	5,6 pF	20876
	Capacitor,chip805_pw D12H	6,8 pF	20834
	Capacitor,chip805_pw DSWL	5,6 pF	20876
	Capacitor,chip805_pw DSWH	6,8 pF	20834
	Capacitor,chip805_pw B25L	5,6 pF	20876
	Capacitor,chip805_pw B25H	6,8 pF	20834
	Capacitor,chip805_pw B12L	5,6 pF	20876
	Capacitor,chip805_pw B12H	6,8 pF	20834
	Capacitor,chip805_pw BSWL	5,6 pF	20876
	Capacitor,chip805_pw BSWH	6,8 pF	20834
C164	Capacitor,chip603	1 nF	21102
C165	Capacitor,chip603	1 nF	21102
C166	Capacitor,chip603	100 pF	21101
C167	Capacitor,chip603	100 pF	21101
C168	Capacitor,chip603 S25L	1 nF	21102
	Capacitor,chip603 S25H	1 nF	21102
	Capacitor,chip603 S12L	1 nF	21102
	Capacitor,chip603 S12H	1 nF	21102
	Capacitor,chip603 SSWL	1 nF	21102
	Capacitor,chip603 SSWH	1 nF	21102
	Capacitor,chip603 D25L	Not used	
	Capacitor,chip603 D25H	Not used	
	Capacitor,chip603 D12L	Not used	
	Capacitor,chip603 D12H	Not used	
	Capacitor,chip603 DSWL	Not used	
	Capacitor,chip603 DSWH	Not used	
	Capacitor,chip603 B25L	1 nF	21102
	Capacitor,chip603 B25H	1 nF	21102
	Capacitor,chip603 B12L	1 nF	21102
	Capacitor,chip603 B12H	1 nF	21102
	Capacitor,chip603 BSWL	1 nF	21102
	Capacitor,chip603 BSWH	1 nF	21102
C169	Capacitor,chip603	1 nF	21102
C170	Capacitor,chip603	Not used	
C201	Capacitor,chip603	1 nF	21102
C202	Capacitor,chip603_2%	0,68 pF	22688
C203	Capacitor,chip603_ln	4,7 nF	20803
C204	Capacitor,chip603	0,5 pF	21508
C205	Capacitor,chip1206_ln	39 nF	20838
C206	Capacitor,chip603_2% S25L	3,3 pF	22339
	Capacitor,chip603_2% S25H	0,5 pF	22508
	Capacitor,chip603_2% S12L	3,3 pF	22339
	Capacitor,chip603_2% S12H	0,5 pF	22508
	Capacitor,chip603_2% SSWL	3,3 pF	22339

Copyright © 2004

Partlist for Radioboard TRX3001D/TRDX3001D Date 07-03-2006
Drawing No. 0-3008-03-8 Unit No. 3000

Component	Description	Value	Niros No.
	Capacitor,chip603_2% SSWH	0,5 pF	22508
	Capacitor,chip603_2% D25L	3,3 pF	22339
	Capacitor,chip603_2% D25H	0,5 pF	22508
	Capacitor,chip603_2% D12L	3,3 pF	22339
	Capacitor,chip603_2% D12H	0,5 pF	22508
	Capacitor,chip603_2% DSWL	3,3 pF	22339
	Capacitor,chip603_2% DSWH	0,5 pF	22508
	Capacitor,chip603_2% B25L	3,3 pF	22339
	Capacitor,chip603_2% B25H	0,5 pF	22508
	Capacitor,chip603_2% B12L	3,3 pF	22339
	Capacitor,chip603_2% B12H	0,5 pF	22508
	Capacitor,chip603_2% BSWL	3,3 pF	22339
	Capacitor,chip603_2% BSWH	0,5 pF	22508
C207	Capacitor,chip603_2% S25L	15 pF	22150
	Capacitor,chip603_2% S25H	6,8 pF	22689
	Capacitor,chip603_2% S12L	15 pF	22150
	Capacitor,chip603_2% S12H	6,8 pF	22689
	Capacitor,chip603_2% SSWL	15 pF	22150
	Capacitor,chip603_2% SSWH	6,8 pF	22689
	Capacitor,chip603_2% D25L	15 pF	22150
	Capacitor,chip603_2% D25H	6,8 pF	22689
	Capacitor,chip603_2% D12L	15 pF	22150
	Capacitor,chip603_2% D12H	6,8 pF	22689
	Capacitor,chip603_2% DSWL	15 pF	22150
	Capacitor,chip603_2% DSWH	6,8 pF	22689
	Capacitor,chip603_2% B25L	15 pF	22150
	Capacitor,chip603_2% B25H	6,8 pF	22689
	Capacitor,chip603_2% B12L	15 pF	22150
	Capacitor,chip603_2% B12H	6,8 pF	22689
	Capacitor,chip603_2% BSWL	15 pF	22150
	Capacitor,chip603_2% BSWH	6,8 pF	22689
C209	Capacitor,chip603_2%	Not used	
C210	Capacitor,c603_n750 S25L	33 pF	20840
	Capacitor,c603_n750 S25H	27 pF	20843
	Capacitor,c603_n750 S12L	33 pF	20840
	Capacitor,c603_n750 S12H	27 pF	20843
	Capacitor,c603_n750 SSWL	33 pF	20840
	Capacitor,c603_n750 SSWH	27 pF	20843
	Capacitor,c603_n750 D25L	33 pF	20840
	Capacitor,c603_n750 D25H	27 pF	20843
	Capacitor,c603_n750 D12L	33 pF	20840
	Capacitor,c603_n750 D12H	27 pF	20843
	Capacitor,c603_n750 DSWL	33 pF	20840
	Capacitor,c603_n750 DSWH	27 pF	20843
	Capacitor,c603_n750 B25L	33 pF	20840
	Capacitor,c603_n750 B25H	27 pF	20843
	Capacitor,c603_n750 B12L	33 pF	20840
	Capacitor,c603_n750 B12H	27 pF	20843
	Capacitor,c603_n750 BSWL	33 pF	20840
	Capacitor,c603_n750 BSWH	27 pF	20843

Copyright © 2004

Partlist for Radioboard TRX3001D/TRDX3001D Date 07-03-2006
Drawing No. 0-3008-03-8 Unit No. 3000

Component	Description	Value	Niros No.
C211	Capacitor,ctan_a	2,2 uF/16V	25613
C212	Capacitor,chip603	0,5 pF	21508
C213	Capacitor,chip603_n750	4,7 pF	20806
C214	Capacitor,chip603_n750	8,2 pF	20807
C215	Capacitor,chip603_ln	4,7 nF	20803
C216	Capacitor,ctan_a	6,8 uF/10V	25619
C217	Capacitor,chip603	150 pF	21151
C218	Capacitor,chip603	22 pF	21220
C219	Capacitor,chip603	Not used	
C220	Capacitor,chip603	10 nF	21103
C221	Capacitor,chip603_2%	22 pF	22220
C222	Capacitor,chip603	10 nF	21103
C223	Capacitor,chip603	10 nF	21103
C224	Capacitor,chip603	1 nF	21102
C225	Capacitor,chip603	10 nF	21103
C226	Capacitor,chip603	10 nF	21103
C227	Capacitor,chip603	1 nF	21102
C228	Capacitor,chip603	1 nF	21102
C230	Capacitor,chip603	47 nF	21473
C232	Capacitor,chip603	220 pF	21221
C234	Capacitor,chip805	47 nF	20653
C235	Capacitor,chip603_ln	Not used	
C236	Capacitor,chip603_ln	Not used	
C237	Capacitor,chip603_ln	Not used	
C238	Capacitor,chip1206_ln	39 nF	20838
C239	Capacitor,chip2824	470 nF	20823
C240	Capacitor,chip1206_ln	47 nF	20805
C241	Capacitor,ctan_c	Not used	
C242	Capacitor,ctan_a	6,8 uF/10V	25619
C243	Capacitor,chip603	1 nF	21102
C244	Capacitor,chip805	330 nF	20662
C245	Capacitor,ctan_a	6,8 uF/10V	25619
C246	Capacitor,chip603	10 nF	21103
C247	Capacitor,chip603	10 nF	21103
C249	Capacitor,chip603	10 nF	21103
C250	Capacitor,chip603	100 pF	21101
C251	Capacitor,chip603	220 pF	21221
C252	Capacitor,chip603	220 pF	21221
C253	Capacitor,chip603	220 pF	21221
C254	Capacitor,chip603	10 nF	21103
C255	Capacitor,chip603	10 nF	21103
C256	Capacitor,chip1206_ln	39 nF	20838
C257	Capacitor,chip603	100 pF	21101
C258	Capacitor,chip603	82 pF	21820
C259	Capacitor,chip603	150 pF	21151

p. 26 of 54 PC. Board No. 790-7

Copyright © 2004

Partlist for Radioboard TRX3001D/TRDX3001D Date 07-03-2006
Drawing No. 0-3008-03-8 Unit No. 3000

Component	Description	Value	Niros No.
C260	Capacitor,chip402	150 pF	23151
C261	Capacitor,chip603	150 pF	21151
C301	Capacitor,chip603_ln	Not used	
C302	Capacitor,chip603_ln	Not used	
C303	Capacitor,chip603_ln	Not used	
C304	Capacitor,chip603	10 nF	21103
C305	Capacitor,chip1206_ln	3,9 nF	20861
C306	Capacitor,chip1206_ln	39 nF	20838
C307	Capacitor,ctan_a	6,8 uF/10V	25619
C308	Capacitor,chip603	1 nF	21102
C309	Capacitor,chip805	330 nF	20662
C310	Capacitor,ctan_a	6,8 uF/10V	25619
C311	Capacitor,chip603	10 nF	21103
C312	Capacitor,chip603	1 nF	21102
C313	Capacitor,chip603	10 nF	21103
C315	Capacitor,chip603	100 pF	21101
C317	Capacitor,chip603	Not used	
C318	Capacitor,chip603	Not used	
C319	Capacitor,chip603	220 pF	21221
C320	Capacitor,chip603	Not used	
C321	Capacitor,chip603	Not used	
C322	Capacitor,chip603	Not used	
C323	Capacitor,chip603	47 nF	21473
C324	Capacitor,chip603	47 nF	21473
C325	Capacitor,chip603	47 nF	21473
C326	Capacitor,chip603	Not used	
C327	Capacitor,chip603	100 pF	21101
C328	Capacitor,chip603_n750	Not used	
C329	Capacitor,chip805	100 nF	20654
C330	Capacitor,chip603_n750	Not used	
C331	Capacitor,chip603_n750	Not used	
C332	Capacitor,chip603_n750	Not used	
C333	Capacitor,chip603	47 pF	21470
C334	Capacitor,chip603_n750	Not used	
C335	Capacitor,chip603	Not used	
C336	Capacitor,chip603	10 nF	21103
C337	Capacitor,chip603	47 pF	21470
C338	Capacitor,chip603	1 nF	21102
C339	Capacitor,chip603	10 nF	21103
C340	Capacitor,chip603	1 nF	21102
C341	Capacitor,chip603	1 nF	21102
C342	Capacitor,chip603_ln	4,7 nF	20803
C343	Capacitor,ctan_a	6,8 uF/10V	25619
C344	Capacitor,chip603_n750	4,7 pF	20806
C345	Capacitor,chip603_n750	8,2 pF	20807

p. 27 of 54 PC. Board No. 790-7

Copyright © 2004

Partlist for Radioboard TRX3001D/TRDX3001D Date 07-03-2006
Drawing No. 0-3008-03-8 Unit No. 3000

Component	Description		Value	Niros No.
C346	Capacitor,chip603		0,5 pF	21508
C347	Capacitor,ctan_a		2,2 uF/16V	25613
C348	Capacitor,chip603		10 nF	21103
C349	Capacitor,chip603_n750		47 pF	20816
C350	Capacitor,chip603_2%		Not used	
C352	Capacitor,chip603_2%		Not used	
C353	Capacitor,chip603_2%		27 pF	22270
C354	Capacitor,chip1206_ln		22 nF	20837
C355	Capacitor,ctan_a		6,8 uF/10V	25619
C356	Capacitor,ctan_a		6,8 uF/10V	25619
C357	Capacitor,chip603		220 pF	21221
C359	Capacitor,ctan_b		10 uF/16V	25622
C360	Capacitor,chip1206_ln		22 nF	20837
C361	Capacitor,chip603		100 pF	21101
C362	Capacitor,chip603		82 pF	21820
C363	Capacitor,ctan_b		10 uF/16V	25622
C364	Capacitor,ctan_b		10 uF/16V	25622
C365	Capacitor,ctan_c		10 uF/25V	25623
C366	Capacitor,chip603		22 pF	21220
C367	Capacitor,chip603		22 pF	21220
C368	Capacitor,chip603		22 pF	21220
C370	Capacitor,chip603		1 nF	21102
C371	Capacitor,chip805	S25L	330 nF	20662
	Capacitor,chip805	S25H	330 nF	20662
	Capacitor,chip805	S12L	330 nF	20662
	Capacitor,chip805	S12H	330 nF	20662
	Capacitor,chip805	SSWL	330 nF	20662
	Capacitor,chip805	SSWH	330 nF	20662
	Capacitor,chip805	D25L	Not used	
	Capacitor,chip805	D25H	Not used	
	Capacitor,chip805	D12L	Not used	
	Capacitor,chip805	D12H	Not used	
	Capacitor,chip805	DSWL	Not used	
	Capacitor,chip805	DSWH	Not used	
	Capacitor,chip805	B25L	330 nF	20662
	Capacitor,chip805	B25H	330 nF	20662
	Capacitor,chip805	B12L	330 nF	20662
	Capacitor,chip805	B12H	330 nF	20662
	Capacitor,chip805	BSWL	330 nF	20662
	Capacitor,chip805	BSWH	330 nF	20662
C372	Capacitor,chip603	S25L	22 pF	21220
	Capacitor,chip603	S25H	22 pF	21220
	Capacitor,chip603	S12L	22 pF	21220
	Capacitor,chip603	S12H	22 pF	21220
	Capacitor,chip603	SSWL	22 pF	21220
	Capacitor,chip603	SSWH	22 pF	21220
	Capacitor,chip603	D25L	Not used	
	Capacitor,chip603	D25H	Not used	

p. 28 of 54 PC. Board No. 790-7

Copyright © 2004

Partlist for Radioboard TRX3001D/TRDX3001D Date 07-03-2006
Drawing No. 0-3008-03-8 Unit No. 3000

Component	Description	Value	Niros No.
	Capacitor,chip603 D12L	Not used	
	Capacitor,chip603 D12H	Not used	
	Capacitor,chip603 DSWL	Not used	
	Capacitor,chip603 DSWH	Not used	
	Capacitor,chip603 B25L	22 pF	21220
	Capacitor,chip603 B25H	22 pF	21220
	Capacitor,chip603 B12L	22 pF	21220
	Capacitor,chip603 B12H	22 pF	21220
	Capacitor,chip603 BSWL	22 pF	21220
	Capacitor,chip603 BSWH	22 pF	21220
C373	Capacitor,chip603 S25L	22 pF	21220
	Capacitor,chip603 S25H	22 pF	21220
	Capacitor,chip603 S12L	22 pF	21220
	Capacitor,chip603 S12H	22 pF	21220
	Capacitor,chip603 SSWL	22 pF	21220
	Capacitor,chip603 SSWH	22 pF	21220
	Capacitor,chip603 D25L	Not used	
	Capacitor,chip603 D25H	Not used	
	Capacitor,chip603 D12L	Not used	
	Capacitor,chip603 D12H	Not used	
	Capacitor,chip603 DSWL	Not used	
	Capacitor,chip603 DSWH	Not used	
	Capacitor,chip603 B25L	22 pF	21220
	Capacitor,chip603 B25H	22 pF	21220
	Capacitor,chip603 B12L	22 pF	21220
	Capacitor,chip603 B12H	22 pF	21220
	Capacitor,chip603 BSWL	22 pF	21220
	Capacitor,chip603 BSWH	22 pF	21220
C374	Capacitor,chip805 S25L	330 nF	20662
	Capacitor,chip805 S25H	330 nF	20662
	Capacitor,chip805 S12L	330 nF	20662
	Capacitor,chip805 S12H	330 nF	20662
	Capacitor,chip805 SSWL	330 nF	20662
	Capacitor,chip805 SSWH	330 nF	20662
	Capacitor,chip805 D25L	Not used	
	Capacitor,chip805 D25H	Not used	
	Capacitor,chip805 D12L	Not used	
	Capacitor,chip805 D12H	Not used	
	Capacitor,chip805 DSWL	Not used	
	Capacitor,chip805 DSWH	Not used	
	Capacitor,chip805 B25L	330 nF	20662
	Capacitor,chip805 B25H	330 nF	20662
	Capacitor,chip805 B12L	330 nF	20662
	Capacitor,chip805 B12H	330 nF	20662
	Capacitor,chip805 BSWL	330 nF	20662
	Capacitor,chip805 BSWH	330 nF	20662
C375	Capacitor,chip805 S25L	330 nF	20662
	Capacitor,chip805 S25H	330 nF	20662
	Capacitor,chip805 S12L	330 nF	20662
	Capacitor,chip805 S12H	330 nF	20662

Copyright © 2004

Partlist for Radioboard TRX3001D/TRDX3001D Date 07-03-2006
Drawing No. 0-3008-03-8 Unit No. 3000

Component	Description	Value	Niros No.
	Capacitor,chip805 SSWL	330 nF	20662
	Capacitor,chip805 SSWH	330 nF	20662
	Capacitor,chip805 D25L	Not used	
	Capacitor,chip805 D25H	Not used	
	Capacitor,chip805 D12L	Not used	
	Capacitor,chip805 D12H	Not used	
	Capacitor,chip805 DSWL	Not used	
	Capacitor,chip805 DSWH	Not used	
	Capacitor,chip805 B25L	330 nF	20662
	Capacitor,chip805 B25H	330 nF	20662
	Capacitor,chip805 B12L	330 nF	20662
	Capacitor,chip805 B12H	330 nF	20662
	Capacitor,chip805 BSWL	330 nF	20662
	Capacitor,chip805 BSWH	330 nF	20662
C376	Capacitor,chip603	1 nF	21102
C377	Capacitor,chip603	1 nF	21102
C378	Capacitor,chip603	1 nF	21102
C379	Capacitor,chip603	1 nF	21102
C380	Capacitor,chip603	27 pF	21270
C381	Capacitor,chip603	Not used	
C401	Capacitor,chip603	Not used	
C402	Capacitor,chip603	10 nF	21103
C403	Capacitor,chip603_2%	3,3 pF	22339
C404	Capacitor,chip603_2%	3,3 pF	22339
C405	Capacitor,chip603_2%	10 pF	22100
C406	Capacitor,chip603_2%	1,8 pF	22189
C407	Capacitor,chip603_2%	1,8 pF	22189
C408	Capacitor,chip603_2%	4,7 pF	22479
C409	Capacitor,chip603_2%	1,8 pF	22189
C410	Capacitor,chip603_2%	10 pF	22100
C411	Capacitor,chip603_2% S25L	4,7 pF	22479
	Capacitor,chip603_2% S25H	3,3 pF	22339
	Capacitor,chip603_2% S12L	4,7 pF	22479
	Capacitor,chip603_2% S12H	3,3 pF	22339
	Capacitor,chip603_2% SSWL	4,7 pF	22479
	Capacitor,chip603_2% SSWH	3,3 pF	22339
	Capacitor,chip603_2% D25L	4,7 pF	22479
	Capacitor,chip603_2% D25H	3,3 pF	22339
	Capacitor,chip603_2% D12L	4,7 pF	22479
	Capacitor,chip603_2% D12H	3,3 pF	22339
	Capacitor,chip603_2% DSWL	4,7 pF	22479
	Capacitor,chip603_2% DSWH	3,3 pF	22339
	Capacitor,chip603_2% B25L	4,7 pF	22479
	Capacitor,chip603_2% B25H	3,3 pF	22339
	Capacitor,chip603_2% B12L	4,7 pF	22479
	Capacitor,chip603_2% B12H	3,3 pF	22339
	Capacitor,chip603_2% BSWL	4,7 pF	22479
	Capacitor,chip603_2% BSWH	3,3 pF	22339

p. 30 of 54 PC. Board No. 790-7

Copyright © 2004

Partlist for Radioboard TRX3001D/TRDX3001D Date 07-03-2006
Drawing No. 0-3008-03-8 Unit No. 3000

Component	Description	Value	Niros No.
C412	Capacitor,chip603_2% S25L	3,3 pF	22339
	Capacitor,chip603_2% S25H	8,2 pF	22829
	Capacitor,chip603_2% S12L	3,3 pF	22339
	Capacitor,chip603_2% S12H	8,2 pF	22829
	Capacitor,chip603_2% SSWL	3,3 pF	22339
	Capacitor,chip603_2% SSWH	8,2 pF	22829
	Capacitor,chip603_2% D25L	3,3 pF	22339
	Capacitor,chip603_2% D25H	8,2 pF	22829
	Capacitor,chip603_2% D12L	3,3 pF	22339
	Capacitor,chip603_2% D12H	8,2 pF	22829
	Capacitor,chip603_2% DSWL	3,3 pF	22339
	Capacitor,chip603_2% DSWH	8,2 pF	22829
	Capacitor,chip603_2% B25L	3,3 pF	22339
	Capacitor,chip603_2% B25H	8,2 pF	22829
	Capacitor,chip603_2% B12L	3,3 pF	22339
	Capacitor,chip603_2% B12H	8,2 pF	22829
	Capacitor,chip603_2% BSWL	3,3 pF	22339
	Capacitor,chip603_2% BSWH	8,2 pF	22829
C413	Capacitor,chip603	Not used	
C414	Capacitor,chip603	10 nF	21103
C415	Capacitor,chip603	1 nF	21102
C416	Resistor,chip603	0 Ohm	14000
C417	Capacitor,chip603	10 nF	21103
C419	Capacitor,chip603	10 nF	21103
C420	Capacitor,chip603 S25L	10 nF	21103
	Capacitor,chip603 S25H	10 nF	21103
	Capacitor,chip603 S12L	Not used	
	Capacitor,chip603 S12H	Not used	
	Capacitor,chip603 SSWL	Not used	
	Capacitor,chip603 SSWH	Not used	
	Capacitor,chip603 D25L	10 nF	21103
	Capacitor,chip603 D25H	10 nF	21103
	Capacitor,chip603 D12L	Not used	
	Capacitor,chip603 D12H	Not used	
	Capacitor,chip603 DSWL	Not used	
	Capacitor,chip603 DSWH	Not used	
	Capacitor,chip603 B25L	10 nF	21103
	Capacitor,chip603 B25H	10 nF	21103
	Capacitor,chip603 B12L	Not used	
	Capacitor,chip603 B12H	Not used	
	Capacitor,chip603 BSWL	Not used	
	Capacitor,chip603 BSWH	Not used	
C421	Capacitor,chip603 S25L	Not used	
	Capacitor,chip603 S25H	Not used	
	Capacitor,chip603 S12L	10 nF	21103
	Capacitor,chip603 S12H	10 nF	21103
	Capacitor,chip603 SSWL	Not used	
	Capacitor,chip603 SSWH	Not used	
	Capacitor,chip603 D25L	Not used	
	Capacitor,chip603 D25H	Not used	

p. 31 of 54 PC. Board No. 790-7

Copyright © 2004

Partlist for Radioboard TRX3001D/TRDX3001D Date 07-03-2006
Drawing No. 0-3008-03-8 Unit No. 3000

Component	Description		Value	Niros No.
	Capacitor,chip603	D12L	10 nF	21103
	Capacitor,chip603	D12H	10 nF	21103
	Capacitor,chip603	DSWL	Not used	
	Capacitor,chip603	DSWH	Not used	
	Capacitor,chip603	B25L	Not used	
	Capacitor,chip603	B25H	Not used	
	Capacitor,chip603	B12L	10 nF	21103
	Capacitor,chip603	B12H	10 nF	21103
	Capacitor,chip603	BSWL	Not used	
	Capacitor,chip603	BSWH	Not used	
C422	Capacitor,chip603	S25L	Not used	
	Capacitor,chip603	S25H	Not used	
	Capacitor,chip603	S12L	Not used	
	Capacitor,chip603	S12H	Not used	
	Capacitor,chip603	SSWL	10 nF	21103
	Capacitor,chip603	SSWH	10 nF	21103
	Capacitor,chip603	D25L	Not used	
	Capacitor,chip603	D25H	Not used	
	Capacitor,chip603	D12L	Not used	
	Capacitor,chip603	D12H	Not used	
	Capacitor,chip603	DSWL	10 nF	21103
	Capacitor,chip603	DSWH	10 nF	21103
	Capacitor,chip603	B25L	Not used	
	Capacitor,chip603	B25H	Not used	
	Capacitor,chip603	B12L	Not used	
	Capacitor,chip603	B12H	Not used	
	Capacitor,chip603	BSWL	10 nF	21103
	Capacitor,chip603	BSWH	10 nF	21103
C423	Capacitor,chip603	S25L	Not used	
	Capacitor,chip603	S25H	Not used	
	Capacitor,chip603	S12L	Not used	
	Capacitor,chip603	S12H	Not used	
	Capacitor,chip603	SSWL	10 nF	21103
	Capacitor,chip603	SSWH	10 nF	21103
	Capacitor,chip603	D25L	Not used	
	Capacitor,chip603	D25H	Not used	
	Capacitor,chip603	D12L	Not used	
	Capacitor,chip603	D12H	Not used	
	Capacitor,chip603	DSWL	10 nF	21103
	Capacitor,chip603	DSWH	10 nF	21103
	Capacitor,chip603	B25L	Not used	
	Capacitor,chip603	B25H	Not used	
	Capacitor,chip603	B12L	Not used	
	Capacitor,chip603	B12H	Not used	
	Capacitor,chip603	BSWL	10 nF	21103
	Capacitor,chip603	BSWH	10 nF	21103
C424	Capacitor,chip603	S25L	Not used	
	Capacitor,chip603	S25H	Not used	
	Capacitor,chip603	S12L	Not used	
	Capacitor,chip603	S12H	Not used	

p. 32 of 54 PC. Board No. 790-7

Copyright © 2004

Partlist for Radioboard TRX3001D/TRDX3001D Date 07-03-2006
Drawing No. 0-3008-03-8 Unit No. 3000

Component	Description		Value	Niros No.
	Capacitor,chip603	SSWL	10 nF	21103
	Capacitor,chip603	SSWH	10 nF	21103
	Capacitor,chip603	D25L	Not used	
	Capacitor,chip603	D25L	Not used	
	Capacitor,chip603	D12L	Not used	
	Capacitor,chip603	D12H	Not used	
	Capacitor,chip603	DSWL	10 nF	21103
	Capacitor,chip603	DSWH	10 nF	21103
	Capacitor,chip603	B25L	Not used	
	Capacitor,chip603	B25H	Not used	
	Capacitor,chip603	B12L	Not used	
	Capacitor,chip603	B12H	Not used	
	Capacitor,chip603	BSWL	10 nF	21103
	Capacitor,chip603	BSWH	10 nF	21103
C425	Capacitor,chip603	S25L	Not used	
	Capacitor,chip603	S25H	Not used	
	Capacitor,chip603	S12L	6,8 pF	21689
	Capacitor,chip603	S12H	6,8 pF	21689
	Capacitor,chip603	SSWL	6,8 pF	21689
	Capacitor,chip603	SSWH	6,8 pF	21689
	Capacitor,chip603	D25L	Not used	
	Capacitor,chip603	D25H	Not used	
	Capacitor,chip603	D12L	6,8 pF	21689
	Capacitor,chip603	D12H	6,8 pF	21689
	Capacitor,chip603	DSWL	6,8 pF	21689
	Capacitor,chip603	DSWH	6,8 pF	21689
	Capacitor,chip603	B25L	Not used	
	Capacitor,chip603	B25H	Not used	
	Capacitor,chip603	B12L	6,8 pF	21689
	Capacitor,chip603	B12H	6,8 pF	21689
	Capacitor,chip603	BSWL	6,8 pF	21689
	Capacitor,chip603	BSWH	6,8 pF	21689
C426	Capacitor,chip603	S25L	Not used	
	Capacitor,chip603	S25H	Not used	
	Capacitor,chip603	S12L	Not used	
	Capacitor,chip603	S12H	Not used	
	Capacitor,chip603	SSWL	10 nF	21103
	Capacitor,chip603	SSWH	10 nF	21103
	Capacitor,chip603	D25L	Not used	
	Capacitor,chip603	D25H	Not used	
	Capacitor,chip603	D12L	Not used	
	Capacitor,chip603	D12H	Not used	
	Capacitor,chip603	DSWL	10 nF	21103
	Capacitor,chip603	DSWH	10 nF	21103
	Capacitor,chip603	B25L	Not used	
	Capacitor,chip603	B25H	Not used	
	Capacitor,chip603	B12L	Not used	
	Capacitor,chip603	B12H	Not used	
	Capacitor,chip603	BSWL	10 nF	21103
	Capacitor,chip603	BSWH	10 nF	21103

p. 33 of 54 PC. Board No. 790-7

Copyright © 2004

Partlist for Radioboard TRX3001D/TRDX3001D Date 07-03-2006
Drawing No. 0-3008-03-8 Unit No. 3000

Component	Description	Value	Niros No.
C427	Capacitor,chip603 S25L	8,2 pF	21829
	Capacitor,chip603 S25H	8,2 pF	21829
	Capacitor,chip603 S12L	Not used	
	Capacitor,chip603 S12H	Not used	
	Capacitor,chip603 SSWL	8,2 pF	21829
	Capacitor,chip603 SSWH	8,2 pF	21829
	Capacitor,chip603 D25L	8,2 pF	21829
	Capacitor,chip603 D25H	8,2 pF	21829
	Capacitor,chip603 D12L	Not used	
	Capacitor,chip603 D12H	Not used	
	Capacitor,chip603 DSWL	8,2 pF	21829
	Capacitor,chip603 DSWH	8,2 pF	21829
	Capacitor,chip603 B25L	8,2 pF	21829
	Capacitor,chip603 B25H	8,2 pF	21829
	Capacitor,chip603 B12L	Not used	
	Capacitor,chip603 B12H	Not used	
	Capacitor,chip603 BSWL	8,2 pF	21829
	Capacitor,chip603 BSWH	8,2 pF	21829
C428	Capacitor,chip603 S25L	Not used	
	Capacitor,chip603 S25H	Not used	
	Capacitor,chip603 S12L	18 pF	21180
	Capacitor,chip603 S12H	18 pF	21180
	Capacitor,chip603 SSWL	18 pF	21180
	Capacitor,chip603 SSWH	18 pF	21180
	Capacitor,chip603 D25L	Not used	
	Capacitor,chip603 D25H	Not used	
	Capacitor,chip603 D12L	18 pF	21180
	Capacitor,chip603 D12H	18 pF	21180
	Capacitor,chip603 DSWL	18 pF	21180
	Capacitor,chip603 DSWH	18 pF	21180
	Capacitor,chip603 B25L	Not used	
	Capacitor,chip603 B25H	Not used	
	Capacitor,chip603 B12L	18 pF	21180
	Capacitor,chip603 B12H	18 pF	21180
	Capacitor,chip603 BSWL	18 pF	21180
	Capacitor,chip603 BSWH	18 pF	21180
C429	Capacitor,chip603 S25L	Not used	
	Capacitor,chip603 S25H	Not used	
	Capacitor,chip603 S12L	6,8 pF	21689
	Capacitor,chip603 S12H	6,8 pF	21689
	Capacitor,chip603 SSWL	6,8 pF	21689
	Capacitor,chip603 SSWH	6,8 pF	21689
	Capacitor,chip603 D25L	Not used	
	Capacitor,chip603 D25H	Not used	
	Capacitor,chip603 D12L	6,8 pF	21689
	Capacitor,chip603 D12H	6,8 pF	21689
	Capacitor,chip603 DSWL	6,8 pF	21689
	Capacitor,chip603 DSWH	6,8 pF	21689
	Capacitor,chip603 B25L	Not used	
	Capacitor,chip603 B25H	Not used	
	Capacitor,chip603 B12L	6,8 pF	21689

p. 34 of 54 PC. Board No. 790-7

Copyright © 2004

Partlist for Radioboard TRX3001D/TRDX3001D Date 07-03-2006
Drawing No. 0-3008-03-8 Unit No. 3000

Component	Description		Value	Niros No.
	Capacitor,chip603	B12H	6,8 pF	21689
	Capacitor,chip603	BSWL	6,8 pF	21689
	Capacitor,chip603	BSWH	6,8 pF	21689
C430	Capacitor,chip603	S25L	Not used	
	Capacitor,chip603	S25H	Not used	
	Capacitor,chip603	S12L	Not used	
	Capacitor,chip603	S12H	Not used	
	Capacitor,chip603	SSWL	10 nF	21103
	Capacitor,chip603	SSWH	10 nF	21103
	Capacitor,chip603	D25L	Not used	
	Capacitor,chip603	D25H	Not used	
	Capacitor,chip603	D12L	Not used	
	Capacitor,chip603	D12H	Not used	
	Capacitor,chip603	DSWL	10 nF	21103
	Capacitor,chip603	DSWH	10 nF	21103
	Capacitor,chip603	B25L	Not used	
	Capacitor,chip603	B25H	Not used	
	Capacitor,chip603	B12L	Not used	
	Capacitor,chip603	B12H	Not used	
	Capacitor,chip603	BSWL	10 nF	21103
	Capacitor,chip603	BSWH	10 nF	21103
C431	Capacitor,chip603	S25L	Not used	
	Capacitor,chip603	S25H	Not used	
	Capacitor,chip603	S12L	Not used	
	Capacitor,chip603	S12H	Not used	
	Capacitor,chip603	SSWL	10 nF	21103
	Capacitor,chip603	SSWH	10 nF	21103
	Capacitor,chip603	D25L	Not used	
	Capacitor,chip603	D25H	Not used	
	Capacitor,chip603	D12L	Not used	
	Capacitor,chip603	D12H	Not used	
	Capacitor,chip603	DSWL	10 nF	21103
	Capacitor,chip603	DSWH	10 nF	21103
	Capacitor,chip603	B25L	Not used	
	Capacitor,chip603	B25H	Not used	
	Capacitor,chip603	B12L	Not used	
	Capacitor,chip603	B12H	Not used	
	Capacitor,chip603	BSWL	10 nF	21103
	Capacitor,chip603	BSWH	10 nF	21103
C432	Capacitor,chip603	S25L	10 nF	21103
	Capacitor,chip603	S25H	10 nF	21103
	Capacitor,chip603	S12L	Not used	
	Capacitor,chip603	S12H	Not used	
	Capacitor,chip603	SSWL	Not used	
	Capacitor,chip603	SSWH	Not used	
	Capacitor,chip603	D25L	10 nF	21103
	Capacitor,chip603	D25H	10 nF	21103
	Capacitor,chip603	D12L	Not used	
	Capacitor,chip603	D12H	Not used	
	Capacitor,chip603	DSWL	Not used	
	Capacitor,chip603	DSWH	Not used	

p. 35 of 54 PC. Board No. 790-7

Copyright © 2004

Partlist for Radioboard TRX3001D/TRDX3001D Date 07-03-2006
Drawing No. 0-3008-03-8 Unit No. 3000

Component	Description	Value	Niros No.
	Capacitor,chip603 B25L	10 nF	21103
	Capacitor,chip603 B25H	10 nF	21103
	Capacitor,chip603 B12L	Not used	
	Capacitor,chip603 B12H	Not used	
	Capacitor,chip603 BSWL	Not used	
	Capacitor,chip603 BSWH	Not used	
C433	Capacitor,chip603 S25L	Not used	
	Capacitor,chip603 S25H	Not used	
	Capacitor,chip603 S12L	10 nF	21103
	Capacitor,chip603 S12H	10 nF	21103
	Capacitor,chip603 SSWL	Not used	
	Capacitor,chip603 SSWH	Not used	
	Capacitor,chip603 D25L	Not used	
	Capacitor,chip603 D25H	Not used	
	Capacitor,chip603 D12L	10 nF	21103
	Capacitor,chip603 D12H	10 nF	21103
	Capacitor,chip603 DSWL	Not used	
	Capacitor,chip603 DSWH	Not used	
	Capacitor,chip603 B25L	Not used	
	Capacitor,chip603 B25H	Not used	
	Capacitor,chip603 B12L	10 nF	21103
	Capacitor,chip603 B12H	10 nF	21103
	Capacitor,chip603 BSWL	Not used	
	Capacitor,chip603 BSWH	Not used	
C434	Capacitor,chip603	3,9 pF	21399
C435	Capacitor,chip603	10 nF	21103
C436	Capacitor,chip603	1 nF	21102
C437	Capacitor,chip603	100 pF	21101
C438	Capacitor,chip603	12 pF	21120
C439	Capacitor,chip603	12 pF	21120
C440	Capacitor,chip603	10 nF	21103
C441	Capacitor,chip603	10 nF	21103
C442	Capacitor,chip603	10 pF	21100
C443	Capacitor,chip603	10 nF	21103
C444	Capacitor,chip603	Not used	
C445	Capacitor,chip603_2%	15 pF	22150
C446	Capacitor,chip603	39 pF	21390
C447	Capacitor,chip603_2%	1 pF	22109
C448	Capacitor,chip603_2%	3,3 pF	22339
C449	Capacitor,chip603_2%	12 pF	22120
C450	Capacitor,chip603_2%	10 pF	22100
C451	Capacitor,chip603_2%	1 pF	22109
C452	Capacitor,chip603_2%	1 pF	22109
C453	Capacitor,chip603_2%	3,3 pF	22339
C454	Capacitor,chip603_2%	1 pF	22109
C455	Capacitor,chip603_2%	10 pF	22100
C456	Capacitor,chip603_2%	3,3 pF	22339

Copyright © 2004

Partlist for Radioboard TRX3001D/TRDX3001D Date 07-03-2006
Drawing No. 0-3008-03-8 Unit No. 3000

Component	Description		Value	Niros No.
C457	Capacitor,chip603_2%		0,68 pF	22688
C458	Capacitor,chip603		1 nF	21102
C501	Capacitor,chip603		10 nF	21103
C502	Capacitor,chip603		10 nF	21103
C503	Capacitor,chip603		10 nF	21103
C504	Capacitor,chip603		10 nF	21103
C505	Capacitor,chip603		10 nF	21103
C506	Capacitot,lyt		330 uF/25V	26027
C507	Capacitor,chip603		10 nF	21103
C508	Capacitor,chip603		10 nF	21103
C509	Capacitor,chip1206		330 nF	20664
C510	Capacitor,ctan_a		6,8 uF/10V	25619
C511	Capacitor,chip805		100 nF	20654
C512	Capacitor,ctan_a		6,8 uF/10V	25619
C513	Capacitor,chip603		1 nF	21102
C514	Capacitor,ctan_a		6,8 uF/10V	25619
C515	Capacitor,chip603		10 nF	21103
C516	Capacitor,chip603		1 nF	21102
C517	Capacitor,chip603		1 nF	21102
C518	Capacitor,chip603	S25L	Not used	
	Capacitor,chip603	S25H	Not used	
	Capacitor,chip603	S12L	Not used	
	Capacitor,chip603	S12H	Not used	
	Capacitor,chip603	SSWL	47 nF	21473
	Capacitor,chip603	SSWH	47 nF	21473
	Capacitor,chip603	D25L	Not used	
	Capacitor,chip603	D25H	Not used	
	Capacitor,chip603	D12L	Not used	
	Capacitor,chip603	D12H	Not used	
	Capacitor,chip603	DSWL	47 nF	21473
	Capacitor,chip603	DSWH	47 nF	21473
	Capacitor,chip603	B25L	Not used	
	Capacitor,chip603	B25H	Not used	
	Capacitor,chip603	B12L	Not used	
	Capacitor,chip603	B12H	Not used	
	Capacitor,chip603	BSWL	47 nF	21473
	Capacitor,chip603	BSWH	47 nF	21473
C519	Capacitor,chip603		47 nF	21473
C520	Capacitor,chip603	S25L	47 nF	21473
	Capacitor,chip603	S25H	47 nF	21473
	Capacitor,chip603	S12L	47 nF	21473
	Capacitor,chip603	S12H	47 nF	21473
	Capacitor,chip603	SSWL	Not used	
	Capacitor,chip603	SSWH	Not used	
	Capacitor,chip603	D25L	47 nF	21473
	Capacitor,chip603	D25H	47 nF	21473
	Capacitor,chip603	D12L	47 nF	21473
	Capacitor,chip603	D12H	47 nF	21473
	Capacitor,chip603	DSWL	Not used	

p. 37 of 54 PC. Board No. 790-7

Copyright © 2004

Partlist for Radioboard TRX3001D/TRDX3001D Date 07-03-2006
Drawing No. 0-3008-03-8 Unit No. 3000

Component	Description		Value	Niros No.
	Capacitor,chip603	DSWH	Not used	
	Capacitor,chip603	B25L	47 nF	21473
	Capacitor,chip603	B25H	47 nF	21473
	Capacitor,chip603	B12L	47 nF	21473
	Capacitor,chip603	B12H	47 nF	21473
	Capacitor,chip603	BSWL	Not used	
	Capacitor,chip603	BSWH	Not used	
C521	Capacitor,chip603	S25L	Not used	
	Capacitor,chip603	S25H	Not used	
	Capacitor,chip603	S12L	Not used	
	Capacitor,chip603	S12H	Not used	
	Capacitor,chip603	SSWL	47 nF	21473
	Capacitor,chip603	SSWH	47 nF	21473
	Capacitor,chip603	D25L	Not used	
	Capacitor,chip603	D25H	Not used	
	Capacitor,chip603	D12L	Not used	
	Capacitor,chip603	D12H	Not used	
	Capacitor,chip603	DSWL	47 nF	21473
	Capacitor,chip603	DSWH	47 nF	21473
	Capacitor,chip603	B25L	Not used	
	Capacitor,chip603	B25H	Not used	
	Capacitor,chip603	B12L	Not used	
	Capacitor,chip603	B12H	Not used	
	Capacitor,chip603	BSWL	47 nF	21473
	Capacitor,chip603	BSWH	47 nF	21473
C522	Capacitor,chip603	S25L	Not used	
	Capacitor,chip603	S25H	Not used	
	Capacitor,chip603	S12L	Not used	
	Capacitor,chip603	S12H	Not used	
	Capacitor,chip603	SSWL	47 nF	21473
	Capacitor,chip603	SSWH	47 nF	21473
	Capacitor,chip603	D25L	Not used	
	Capacitor,chip603	D25H	Not used	
	Capacitor,chip603	D12L	Not used	
	Capacitor,chip603	D12H	Not used	
	Capacitor,chip603	DSWL	47 nF	21473
	Capacitor,chip603	DSWH	47 nF	21473
	Capacitor,chip603	B25L	Not used	
	Capacitor,chip603	B25H	Not used	
	Capacitor,chip603	B12L	Not used	
	Capacitor,chip603	B12H	Not used	
	Capacitor,chip603	BSWL	47 nF	21473
	Capacitor,chip603	BSWH	47 nF	21473
C523	Capacitor,chip603	S25L	47 nF	21473
	Capacitor,chip603	S25H	47 nF	21473
	Capacitor,chip603	S12L	47 nF	21473
	Capacitor,chip603	S12H	47 nF	21473
	Capacitor,chip603	SSWL	Not used	
	Capacitor,chip603	SSWH	Not used	
	Capacitor,chip603	D25L	47 nF	21473

p. 38 of 54 PC. Board No. 790-7

Copyright © 2004

Partlist for Radioboard TRX3001D/TRDX3001D Date 07-03-2006
Drawing No. 0-3008-03-8 Unit No. 3000

Component	Description		Value	Niros No.
	Capacitor,chip603	D25H	47 nF	21473
	Capacitor,chip603	D12L	47 nF	21473
	Capacitor,chip603	D12H	47 nF	21473
	Capacitor,chip603	DSWL	Not used	
	Capacitor,chip603	DSWH	Not used	
	Capacitor,chip603	B25L	47 nF	21473
	Capacitor,chip603	B25H	47 nF	21473
	Capacitor,chip603	B12L	47 nF	21473
	Capacitor,chip603	B12H	47 nF	21473
	Capacitor,chip603	BSWL	Not used	
	Capacitor,chip603	BSWH	Not used	
C524	Capacitor,chip603		47 nF	21473
C525	Capacitor,chip603	S25L	Not used	
	Capacitor,chip603	S25H	Not used	
	Capacitor,chip603	S12L	Not used	
	Capacitor,chip603	S12H	Not used	
	Capacitor,chip603	SSWL	47 nF	21473
	Capacitor,chip603	SSWH	47 nF	21473
	Capacitor,chip603	D25L	Not used	
	Capacitor,chip603	D25H	Not used	
	Capacitor,chip603	D12L	Not used	
	Capacitor,chip603	D12H	Not used	
	Capacitor,chip603	DSWL	47 nF	21473
	Capacitor,chip603	DSWH	47 nF	21473
	Capacitor,chip603	B25L	Not used	
	Capacitor,chip603	B25H	Not used	
	Capacitor,chip603	B12L	Not used	
	Capacitor,chip603	B12H	Not used	
	Capacitor,chip603	BSWL	47 nF	21473
	Capacitor,chip603	BSWH	47 nF	21473
C526	Capacitor,chip805		100 nF	20654
C527	Capacitor,chip805		100 nF	20654
C528	Capacitor,ctan_a		2,2 uF/16V	25613
C529	Capacitor,chip805		100 nF	20654
C530	Capacitor,chip805		100 nF	20654
C531	Capacitor,chip805		100 nF	20654
C532	Capacitor,chip603		10 nF	21103
C533	Capacitor,chip603		2,2 nF	21222
C534	Capacitor,chip603		1 nF	21102
C535	Capacitor,chip603		180 pF	21181
C536	Capacitor,chip603		180 pF	21181
C537	Capacitor,chip603		100 pF	21101
C538	Capacitor,chip603		10 nF	21103
C539	Capacitor,ctan_a		2,2 uF/16V	25613
C540	Capacitor,chip603		10 nF	21103
C541	Capacitor,chip603		10 nF	21103
C542	Capacitor,chip603		10 nF	21103
C543	Capacitor,chip603		10 nF	21103

Copyright © 2004

Partlist for Radioboard TRX3001D/TRDX3001D Date 07-03-2006
Drawing No. 0-3008-03-8 Unit No. 3000

Component	Description		Value	Niros No.
C544	Capacitor,chip603		22 nF	21223
C545	Capacitor,chip603		10 nF	21103
C546	Capacitor,chip603		150 pF	21151
C547	Capacitor,chip603		1 nF	21102
C548	Capacitor,chip603		1 nF	21102
F101	Filter		4N7	75906
F102	Filter		4N7	75906
F401-402	Crystal-filter	S25L	25KHZ	30023
	Crystal-filter	S25H	25KHZ	30023
	Crystal-filter	S12L	Not used	
	Crystal-filter	S12H	Not used	
	Crystal-filter	SSWL	25KHZ	30023
	Crystal-filter	SSWH	25KHZ	30023
	Crystal-filter	D25L	25KHZ	30023
	Crystal-filter	D25H	25KHZ	30023
	Crystal-filter	D12L	Not used	
	Crystal-filter	D12H	Not used	
	Crystal-filter	DSWL	25KHZ	30023
	Crystal-filter	DSWH	25KHZ	30023
	Crystal-filter	B25L	25KHZ	30023
	Crystal-filter	B25H	25KHZ	30023
	Crystal-filter	B12L	Not used	
	Crystal-filter	B12H	Not used	
	Crystal-filter	BSWL	25KHZ	30023
	Crystal-filter	BSWH	25KHZ	30023
F403-404	Crystal-filter	S25L	Not used	
	Crystal-filter	S25H	Not used	
	Crystal-filter	S12L	12.5KHZ	30024
	Crystal-filter	S12H	12.5KHZ	30024
	Crystal-filter	SSWL	12.5KHZ	30024
	Crystal-filter	SSWH	12.5KHZ	30024
	Crystal-filter	D25L	Not used	
	Crystal-filter	D25H	Not used	
	Crystal-filter	D12L	12.5KHZ	30024
	Crystal-filter	D12H	12.5KHZ	30024
	Crystal-filter	DSWL	12.5KHZ	30024
	Crystal-filter	DSWH	12.5KHZ	30024
	Crystal-filter	B25L	Not used	
	Crystal-filter	B25H	Not used	
	Crystal-filter	B12L	12.5KHZ	30024
	Crystal-filter	B12H	12.5KHZ	30024
	Crystal-filter	BSWL	12.5KHZ	30024
	Crystal-filter	BSWH	12.5KHZ	30024
F501	Filter		4N7	75906
F502	Filter		4N7	75906
F503	Filter		4N7	75906
F504	Ceramic-filter	S25L	CFWC450E	30066
	Ceramic-filter	S25H	CFWC450E	30066
	Ceramic-filter	S12L	CFWC450G	30067

p. 40 of 54 PC. Board No. 790-7

Copyright © 2004

Partlist for Radioboard TRX3001D/TRDX3001D Date 07-03-2006
Drawing No. 0-3008-03-8 Unit No. 3000

Component	Description		Value	Niros No.
	Ceramic-filter	S12H	CFWC450G	30067
	Ceramic-filter	SSWL	CFWC450E	30066
	Ceramic-filter	SSWH	CFWC450E	30066
	Ceramic-filter	D25L	CFWC450E	30066
	Ceramic-filter	D25H	CFWC450E	30066
	Ceramic-filter	D12L	CFWC450G	30067
	Ceramic-filter	D12H	CFWC450G	30067
	Ceramic-filter	DSWL	CFWC450E	30066
	Ceramic-filter	DSWH	CFWC450E	30066
	Ceramic-filter	B25L	CFWC450E	30066
	Ceramic-filter	B25H	CFWC450E	30066
	Ceramic-filter	B12L	CFWC450G	30067
	Ceramic-filter	B12H	CFWC450G	30067
	Ceramic-filter	BSWL	CFWC450E	30066
	Ceramic-filter	BSWH	CFWC450E	30066
F505	Ceramic-filter	S25L	Not used	
	Ceramic-filter	S25H	Not used	
	Ceramic-filter	S12L	Not used	
	Ceramic-filter	S12H	Not used	
	Ceramic-filter	SSWL	CFWC450G	30067
	Ceramic-filter	SSWH	CFWC450G	30067
	Ceramic-filter	D25L	Not used	
	Ceramic-filter	D25H	Not used	
	Ceramic-filter	D12L	Not used	
	Ceramic-filter	D12H	Not used	
	Ceramic-filter	DSWL	CFWC450G	30067
	Ceramic-filter	DSWH	CFWC450G	30067
	Ceramic-filter	B25L	Not used	
	Ceramic-filter	B25H	Not used	
	Ceramic-filter	B12L	Not used	
	Ceramic-filter	B12H	Not used	
	Ceramic-filter	BSWL	CFWC450G	30067
	Ceramic-filter	BSWH	CFWC450G	30067
F506	Filter		4N7	75906
F507	Filter		4N7	75906
X301	Vtcxo			31208
X302	Crystal		Not used	
T101	Transistor		BFS540	40206
T102	Transistor		BCW61D	40157
T103	Transistor		BCW61D	40157
T104	Transistor		BFG35	40207
T105	Transistor	S25L	BCW61D	40157
	Transistor	S25H	BCW61D	40157
	Transistor	S12L	BCW61D	40157
	Transistor	S12H	BCW61D	40157
	Transistor	SSWL	BCW61D	40157
	Transistor	SSWH	BCW61D	40157

p. 41 of 54 PC. Board No. 790-7

Copyright © 2004

Partlist for Radioboard TRX3001D/TRDX3001D Date 07-03-2006
Drawing No. 0-3008-03-8 Unit No. 3000

Component	Description		Value	Niros No.
	Transistor	D25L	Not used	
	Transistor	D25H	Not used	
	Transistor	D12L	Not used	
	Transistor	D12H	Not used	
	Transistor	DSWL	Not used	
	Transistor	DSWH	Not used	
	Transistor	B25L	BCW61D	40157
	Transistor	B25H	BCW61D	40157
	Transistor	B12L	BCW61D	40157
	Transistor	B12H	BCW61D	40157
	Transistor	BSWL	BCW61D	40157
	Transistor	BSWH	BCW61D	40157
T106	Transistor		BCW60D	40156
T107	Transistor		BCW61D	40157
T108	Transistor		SI4953DY	40202
T110	Transistor	S25L	DTA144EUA	40208
	Transistor	S25H	DTA144EUA	40208
	Transistor	S12L	DTA144EUA	40208
	Transistor	S12H	DTA144EUA	40208
	Transistor	SSWL	DTA144EUA	40208
	Transistor	SSWH	DTA144EUA	40208
	Transistor	D25L	Not used	
	Transistor	D25H	Not used	
	Transistor	D12L	Not used	
	Transistor	D12H	Not used	
	Transistor	DSWL	Not used	
	Transistor	DSWH	Not used	
	Transistor	B25L	DTA144EUA	40208
	Transistor	B25H	DTA144EUA	40208
	Transistor	B12L	DTA144EUA	40208
	Transistor	B12H	DTA144EUA	40208
	Transistor	B12L	DTA144EUA	40208
	Transistor	BSWL	DTA144EUA	40208
T111	Transistor	S25L	DTC144EUA	40209
	Transistor	S25H	DTC144EUA	40209
	Transistor	S12L	DTC144EUA	40209
	Transistor	S12H	DTC144EUA	40209
	Transistor	SSWL	DTC144EUA	40209
	Transistor	SSWH	DTC144EUA	40209
	Transistor	D25L	Not used	
	Transistor	D25H	Not used	
	Transistor	D12L	Not used	
	Transistor	D12H	Not used	
	Transistor	DSWL	Not used	
	Transistor	DSWH	Not used	
	Transistor	B25L	DTC144EUA	40209
	Transistor	B25H	DTC144EUA	40209
	Transistor	B12L	DTC144EUA	40209
	Transistor	B12H	DTC144EUA	40209
	Transistor	BSWL	DTC144EUA	40209
	Transistor	BSWH	DTC144EUA	40209

p. 42 of 54 PC. Board No. 790-7

Copyright © 2004

Partlist for Radioboard TRX3001D/TRDX3001D Date 07-03-2006
Drawing No. 0-3008-03-8 Unit No. 3000

Component	Description		Value	Niros No.
T201	Transistor		SST310	40175
T202	Transistor		BFR92A	40150
T204	Transistor		BFS540	40206
T205	Transistor		DTA123JUA	40210
T206	Transistor		DTC144EUA	40209
T207	Transistor		BFR92A	40150
T208	Transistor		Not used	
T209	Transistor		BCW61D	40157
T210	Transistor		DTC144EUA	40209
T301	Transistor		BCW61D	40157
T302	Transistor		DTC144EUA	40209
T303	Transistor		BFR92A	40150
T304	Transistor		BFR92A	40150
T305	Transistor		BFR92A	40150
T306	Transistor		SST310	40175
T401	Transistor		BFR520	40213
T402	Transistor	S25L	Not used	
	Transistor	S25H	Not used	
	Transistor	S12L	Not used	
	Transistor	S12H	Not used	
	Transistor	SSWL	DTC144EUA	40209
	Transistor	SSWH	DTC144EUA	40209
	Transistor	D25L	Not used	
	Transistor	D25H	Not used	
	Transistor	D12L	Not used	
	Transistor	D12H	Not used	
	Transistor	DSWL	DTC144EUA	40209
	Transistor	DSWH	DTC144EUA	40209
	Transistor	B25L	Not used	
	Transistor	B25H	Not used	
	Transistor	B12L	Not used	
	Transistor	B12H	Not used	
	Transistor	BSWL	DTC144EUA	40209
	Transistor	BSWH	DTC144EUA	40209
T403	Transistor	S25L	Not used	
	Transistor	S25H	Not used	
	Transistor	S12L	Not used	
	Transistor	S12H	Not used	
	Transistor	SSWL	DTC144EUA	40209
	Transistor	SSWH	DTC144EUA	40209
	Transistor	D25L	Not used	
	Transistor	D25H	Not used	
	Transistor	D12L	Not used	
	Transistor	D12H	Not used	
	Transistor	DSWL	DTC144EUA	40209
	Transistor	DSWH	DTC144EUA	40209
	Transistor	B25L	Not used	
	Transistor	B25H	Not used	
	Transistor	B12L	Not used	

p. 43 of 54 PC. Board No. 790-7

Copyright © 2004

Partlist for Radioboard TRX3001D/TRDX3001D Date 07-03-2006
Drawing No. 0-3008-03-8 Unit No. 3000

Component	Description		Value	Niros No.
	Transistor	B12H	Not used	
	Transistor	BSWL	DTC144EUA	40209
	Transistor	BSWH	DTC144EUA	40209
T404	Transistor	S25L	Not used	
	Transistor	S25H	Not used	
	Transistor	S12L	Not used	
	Transistor	S12H	Not used	
	Transistor	SSWL	DTC114YUA	40211
	Transistor	SSWH	DTC114YUA	40211
	Transistor	D25L	Not used	
	Transistor	D25H	Not used	
	Transistor	D12L	Not used	
	Transistor	D12H	Not used	
	Transistor	DSWL	DTC114YUA	40211
	Transistor	DSWH	DTC114YUA	40211
	Transistor	B25L	Not used	
	Transistor	B25H	Not used	
	Transistor	B12L	Not used	
	Transistor	B12H	Not used	
	Transistor	BSWL	DTC114YUA	40211
	Transistor	BSWH	DTC114YUA	40211
T405	Transistor		SST310	40175
T406	Transistor		BFS540	40206
T501	Transistor		FCX720	40201
T502	Transistor		DTC114YUA	40211
T503	Transistor		DTC144EUA	40209
T504	Transistor		BF990A	40187
T505	Transistor		BFR92A	40150
T506	Transistor		DTA123JUA	40210
T507	Transistor		DTC144EUA	40209
T508	Transistor		BCW61D	40157
T509	Transistor	S25L	Not used	
	Transistor	S25L	Not used	
	Transistor	S12L	Not used	
	Transistor	S12H	Not used	
	Transistor	SSWL	DTA144EUA	40208
	Transistor	SSWH	DTA144EUA	40208
	Transistor	D25L	Not used	
	Transistor	D25H	Not used	
	Transistor	D12L	Not used	
	Transistor	D12H	Not used	
	Transistor	DSWL	DTA144EUA	40208
	Transistor	DSWH	DTA144EUA	40208
	Transistor	B25L	Not used	
	Transistor	B25H	Not used	
	Transistor	B12L	Not used	
	Transistor	B12H	Not used	
	Transistor	BSWL	DTA144EUA	40208
	Transistor	BSWH	DTA144EUA	40208

p. 44 of 54 PC. Board No. 790-7

Copyright © 2004

Partlist for Radioboard TRX3001D/TRDX3001D Date 07-03-2006
Drawing No. 0-3008-03-8 Unit No. 3000

Component	Description		Value	Niros No.
D101	Diode	S25L	MA4P1250	45171
	Diode	S25H	MA4P1250	45171
	Diode	S12L	MA4P1250	45171
	Diode	S12H	MA4P1250	45171
	Diode	SSWL	MA4P1250	45171
	Diode	SSWH	MA4P1250	45171
	Resistor,chip1206	D25L	0 Ohm	12000
	Resistor,chip1206	D25H	0 Ohm	12000
	Resistor,chip1206	D12L	0 Ohm	12000
	Resistor,chip1206	D12H	0 Ohm	12000
	Resistor,chip1206	DSWL	0 Ohm	12000
	Resistor,chip1206	DSWH	0 Ohm	12000
	Diode	B25L	MA4P1250	45171
	Diode	B25H	MA4P1250	45171
	Diode	B12L	MA4P1250	45171
	Diode	B12H	MA4P1250	45171
	Diode	BSWL	MA4P1250	45171
	Diode	BSWH	MA4P1250	45171
D102	Diode	S25L	MA4P7001F	45200
	Diode	S25H	MA4P7001F	45200
	Diode	S12L	MA4P7001F	45200
	Diode	S12H	MA4P7001F	45200
	Diode	SSWL	MA4P7001F	45200
	Diode	SSWH	MA4P7001F	45200
	Diode	D25L	Not used	
	Diode	D25H	Not used	
	Diode	D12L	Not used	
	Diode	D12H	Not used	
	Diode	DSWL	Not used	
	Diode	DSWH	Not used	
	Diode	B25L	MA4P7001F	45200
	Diode	B25H	MA4P7001F	45200
	Diode	B12L	MA4P7001F	45200
	Diode	B12H	MA4P7001F	45200
	Diode	BSWL	MA4P7001F	45200
	Diode	BSWH	MA4P7001F	45200
D103	Diode	S25L	BA891	45221
	Diode	S25H	BA891	45221
	Diode	S12L	BA891	45221
	Diode	S12H	BA891	45221
	Diode	SSWL	BA891	45221
	Diode	SSWH	BA891	45221
	Diode	D25L	Not used	
	Diode	D25H	Not used	
	Diode	D12L	Not used	
	Diode	D12H	Not used	
	Diode	DSWL	Not used	
	Diode	DSWH	Not used	
	Diode	B25L	BA891	45221
	Diode	B25H	BA891	45221
	Diode	B12L	BA891	45221

p. 45 of 54 PC. Board No. 790-7

Copyright © 2004

Partlist for Radioboard TRX3001D/TRDX3001D Date 07-03-2006
Drawing No. 0-3008-03-8 Unit No. 3000

Component	Description		Value	Niros No.
	Diode	B12H	BA891	45221
	Diode	BSWL	BA891	45221
	Diode	BSWH	BA891	45221
D104	Diode		BAS70-04	45197
D201	Diode,kap		BB134	45196
D202	Diode,kap		BB134	45196
D203	Diode		BAT17-04	45172
D301	Diode		Not used	
D302	Diode,kap		Not used	
D303	Diode,kap		Not used	
D304	Diode		BAT17-04	45172
D305	Diode,kap		BB134	45196
D306	Diode		BAT54S	45173
D307	Diode,kap		BB134	45196
D308	Diode		BAT54S	45173
D309	Diode	S25L	BAT54S	45173
	Diode	S25H	BAT54S	45173
	Diode	S12L	BAT54S	45173
	Diode	S12H	BAT54S	45173
	Diode	SSWL	BAT54S	45173
	Diode	SSWH	BAT54S	45173
	Diode	D25L	Not used	
	Diode	D25H	Not used	
	Diode	D12L	Not used	
	Diode	D12H	Not used	
	Diode	DSWL	Not used	
	Diode	DSWH	Not used	
	Diode	B25L	BAT54S	45173
	Diode	B25H	BAT54S	45173
	Diode	B12L	BAT54S	45173
	Diode	B12H	BAT54S	45173
	Diode	BSWL	BAT54S	45173
	Diode	BSWH	BAT54S	45173
D401	Diode,kap		BB134	45196
D402	Diode,kap		BB134	45196
D403	Diode,kap		BB134	45196
D404	Diode,kap		BB134	45196
D405	Diode	S25L	Not used	
	Diode	S25H	Not used	
	Diode	S12L	Not used	
	Diode	S12H	Not used	
	Diode	SSWL	BA891	45221
	Diode	SSWH	BA891	45221
	Diode	D25L	Not used	
	Diode	D25H	Not used	
	Diode	D12L	Not used	
	Diode	D12H	Not used	
	Diode	DSWL	BA891	45221
	Diode	DSWH	BA891	45221

p. 46 of 54 PC. Board No. 790-7

Copyright © 2004

Partlist for Radioboard TRX3001D/TRDX3001D Date 07-03-2006
Drawing No. 0-3008-03-8 Unit No. 3000

Component	Description		Value	Niros No.
	Diode	B25L	Not used	
	Diode	B25H	Not used	
	Diode	B12L	Not used	
	Diode	B12H	Not used	
	Diode	BSWL	BA891	45221
	Diode	BSWH	BA891	45221
D406	Diode	S25L	Not used	
	Diode	S25H	Not used	
	Diode	S12L	Not used	
	Diode	S12H	Not used	
	Diode	SSWL	BA891	45221
	Diode	SSWH	BA891	45221
	Diode	D25L	Not used	
	Diode	D25H	Not used	
	Diode	D12L	Not used	
	Diode	D12H	Not used	
	Diode	DSWL	BA891	45221
	Diode	DSWH	BA891	45221
	Diode	B25L	Not used	
	Diode	B25H	Not used	
	Diode	B12L	Not used	
	Diode	B12H	Not used	
	Diode	BSWL	BA891	45221
	Diode	BSWH	BA891	45221
D407	Diode	S25L	Not used	
	Diode	S25H	Not used	
	Diode	S12L	Not used	
	Diode	S12H	Not used	
	Diode	SSWL	BA891	45221
	Diode	SSWH	BA891	45221
	Diode	D25L	Not used	
	Diode	D25H	Not used	
	Diode	D12L	Not used	
	Diode	D12H	Not used	
	Diode	DSWL	BA891	45221
	Diode	DSWH	BA891	45221
	Diode	B25L	Not used	
	Diode	B25H	Not used	
	Diode	B12L	Not used	
	Diode	B12H	Not used	
	Diode	BSWL	BA891	45221
	Diode	BSWH	BA891	45221
D408	Diode	S25L	Not used	
	Diode	S25H	Not used	
	Diode	S12L	Not used	
	Diode	S12H	Not used	
	Diode	SSWL	BA891	45221
	Diode	SSWH	BA891	45221
	Diode	D25L	Not used	
	Diode	D25H	Not used	

p. 47 of 54 PC. Board No. 790-7

Copyright © 2004

Partlist for Radioboard TRX3001D/TRDX3001D Date 07-03-2006
Drawing No. 0-3008-03-8 Unit No. 3000

Component	Description		Value	Niros No.
	Diode	D12L	Not used	
	Diode	D12H	Not used	
	Diode	DSWL	BA891	45221
	Diode	DSWH	BA891	45221
	Diode	B25L	Not used	
	Diode	B25H	Not used	
	Diode	B12L	Not used	
	Diode	B12H	Not used	
	Diode	BSWL	BA891	45221
	Diode	BSWH	BA891	45221
D409	Diode	S25L	Not used	
	Diode	S25H	Not used	
	Diode	S12L	Not used	
	Diode	S12H	Not used	
	Diode	SSWL	BA891	45221
	Diode	SSWH	BA891	45221
	Diode	D25L	Not used	
	Diode	D25H	Not used	
	Diode	D12L	Not used	
	Diode	D12H	Not used	
	Diode	DSWL	BA891	45221
	Diode	DSWH	BA891	45221
	Diode	B25L	Not used	
	Diode	B25H	Not used	
	Diode	B12L	Not used	
	Diode	B12H	Not used	
	Diode	BSWL	BA891	45221
	Diode	BSWH	BA891	45221
D410	Diode		HSMS-2827	45201
D501	Diode,transient		SMCJ16A	41249
D502	Diode		BYD17D	45176
D503	Diode	S25L	Not used	
	Diode	S25H	Not used	
	Diode	S12L	Not used	
	Diode	S12H	Not used	
	Diode	SSWL	BA891	45221
	Diode	SSWH	BA891	45221
	Diode	D25L	Not used	
	Diode	D25H	Not used	
	Diode	D12L	Not used	
	Diode	D12H	Not used	
	Diode	DSWL	BA891	45221
	Diode	DSWH	BA891	45221
	Diode	B25L	Not used	
	Diode	B25H	Not used	
	Diode	B12L	Not used	
	Diode	B12H	Not used	
	Diode	BSWL	BA891	45221
	Diode	BSWH	BA891	45221
D504	Diode	S25L	Not used	

p. 48 of 54 PC. Board No. 790-7

Copyright © 2004

Partlist for Radioboard TRX3001D/TRDX3001D Date 07-03-2006
Drawing No. 0-3008-03-8 Unit No. 3000

Component	Description		Value	Niros No.
	Diode	S25H	Not used	
	Diode	S12L	Not used	
	Diode	S12H	Not used	
	Diode	SSWL	BA891	45221
	Diode	SSWH	BA891	45221
	Diode	D25L	Not used	
	Diode	D25H	Not used	
	Diode	D12L	Not used	
	Diode	D12H	Not used	
	Diode	DSWL	BA891	45221
	Diode	DSWH	BA891	45221
	Diode	B25L	Not used	
	Diode	B25H	Not used	
	Diode	B12L	Not used	
	Diode	B12H	Not used	
	Diode	BSWL	BA891	45221
	Diode	BSWH	BA891	45221
D505	Diode	S25L	Not used	
	Diode	S25H	Not used	
	Diode	S12L	Not used	
	Diode	S12H	Not used	
	Diode	SSWL	BA891	45221
	Diode	SSWH	BA891	45221
	Diode	D25L	Not used	
	Diode	D25H	Not used	
	Diode	D12L	Not used	
	Diode	D12H	Not used	
	Diode	DSWL	BA891	45221
	Diode	DSWH	BA891	45221
	Diode	B25L	Not used	
	Diode	B25H	Not used	
	Diode	B12L	Not used	
	Diode	B12H	Not used	
	Diode	BSWL	BA891	45221
	Diode	BSWH	BA891	45221
D506	Diode	S25L	Not used	
	Diode	S25H	Not used	
	Diode	S12L	Not used	
	Diode	S12H	Not used	
	Diode	SSWL	BA891	45221
	Diode	SSWH	BA891	45221
	Diode	D25L	Not used	
	Diode	D25H	Not used	
	Diode	D12L	Not used	
	Diode	D12H	Not used	
	Diode	DSWL	BA891	45221
	Diode	DSWH	BA891	45221
	Diode	B25L	Not used	
	Diode	B25H	Not used	
	Diode	B12L	Not used	
	Diode	B12H	Not used	

p. 49 of 54 PC. Board No. 790-7

Copyright © 2004

Partlist for Radioboard TRX3001D/TRDX3001D Date 07-03-2006
Drawing No. 0-3008-03-8 Unit No. 3000

Component	Description		Value	Niros No.
	Diode	BSWL	BA891	45221
	Diode	BSWH	BA891	45221
D507	Diode		BAV99	45148
IC101	Pa_modul		RA30H4047M	46626
IC102	Integrated_circuit		TDA2003V	46538
IC103	Integrated_circuit		MIC29152BT	46539
IC201	Integrated_circuit		PIC16CE624	46621
IC202	Integrated_circuit	S25L	Not used	
	Integrated_circuit	S25H	Not used	
	Integrated_circuit	S12L	Not used	
	Integrated_circuit	S12H	Not used	
	Integrated_circuit	SSWL	TC4S66F	46250
	Integrated_circuit	SSWH	TC4S66F	46250
	Integrated_circuit	D25L	Not used	
	Integrated_circuit	D25H	Not used	
	Integrated_circuit	D12L	Not used	
	Integrated_circuit	D12H	Not used	
	Integrated_circuit	DSWL	TC4S66F	46250
	Integrated_circuit	DSWH	TC4S66F	46250
	Integrated_circuit	B25L	Not used	
	Integrated_circuit	B25H	Not used	
	Integrated_circuit	B12L	Not used	
	Integrated_circuit	B12H	Not used	
	Integrated_circuit	BSWL	TC4S66F	46250
	Integrated_circuit	BSWH	TC4S66F	46250
IC203	Integrated_circuit		AD822AR	46552
IC204	Integrated_circuit		Not used	
IC205	Integrated_circuit		Not used	
IC206	Integrated_circuit		LMX2316TM	46564
IC207	Integrated_circuit		DG418DY	46551
IC301	Integrated_circuit		LMX2316TM	46564
IC302	Integrated_circuit		Not used	
IC303	Integrated_circuit		40106BT	46116
IC304	Integrated_circuit		SCI7710YDA	46298
IC501	Integrated_circuit		LM317D	46525
IC502	Integrated_circuit		MC3371	46247
IC503	Integrated_circuit		LPC662	46244
TR401	Trafo		75963	75963
TR402	Trafo		75963	75963
L101	Coil,chip1008		10 nH	76006
L102	Coil,chip805		5.6 nH	76049
L103	Coil,chip1206		75938	75938
L105	Coil,chip	S25L	75879	75879
	Coil,chip	S25H	75879	75879

p. 50 of 54 PC. Board No. 790-7

Copyright © 2004

Partlist for Radioboard TRX3001D/TRDX3001D Date 07-03-2006
Drawing No. 0-3008-03-8 Unit No. 3000

Component	Description		Value	Niros No.
	Coil,chip	S12L	75879	75879
	Coil,chip	S12H	75879	75879
	Coil,chip	SSWL	75879	75879
	Coil,chip	SSWH	75879	75879
	Coil,chip	D25L	Not used	
	Coil,chip	D25H	Not used	
	Coil,chip	D12L	Not used	
	Coil,chip	D12H	Not used	
	Coil,chip	DSWL	Not used	
	Coil,chip	DSWH	Not used	
	Coil,chip	B25L	75879	75879
	Coil,chip	B25H	75879	75879
	Coil,chip	B12L	75879	75879
	Coil,chip	B12H	75879	75879
	Coil,chip	BSWL	75879	75879
	Coil,chip	BSWH	75879	75879
L106	Coil,chip		75879	75879
L107	Coil		75961	75961
L108	Coil		75962	75962
L109	Coil		75962	75962
L110	Coil,chip1206		75938	75938
L111	Coil,chip1206		75938	75938
L113	Coil		75961	75961
L114	Coil		75958	75958
L201	Coil,chip		75879	75879
L202	Coil		75903	75903
L203	Coil,chip		75879	75879
L204	Coil,chip402		27 nH	76044
L205	Coil,chip		75879	75879
L206	Coil		75958	75958
L301	Coil_chip		76008	76008
L302	Coil,chip		75879	75879
L303	Coil,chip1210		75960	75960
L304	Coil		75903	75903
L305	Coil,chip		75879	75879
L307	Coil,chip		75879	75879
L401	Coil		75965	75965
L403	Coil		75965	75965
L405	Coil,chip		75905	75905
L406	Coil		75965	75965
L408	Coil		75965	75965
L410	Coil_chip		76008	76008
L411	Coil,chip		75879	75879
L412	Coil,chip1210		75960	75960
L501	Coil,chip		75883	75883
L502	Coil,chip		75883	75883

p. 51 of 54 PC. Board No. 790-7

Copyright © 2004

Partlist for Radioboard TRX3001D/TRDX3001D Date 07-03-2006
Drawing No. 0-3008-03-8 Unit No. 3000

Component	Description		Value	Niros No.
L503	Coil,chip1206		75938	75938
L504	Coil,chip1206		75938	75938
L505	Coil		455KHZ	76056
L506	Coil,chip		75883	75883
FUSE1	Fuse		Not used	
FUSE2	Fuse		Not used	
FUSE3	Fuse		12A	83374
J1	Antenna_connector			83365
J2	Connector_25pol			83366
J3	Conector_2x3pin			83363
V1	Resistor,chip1206	S25L	1 Kohm	12102
	Resistor,chip1206	S25H	10 Kohm	12103
	Resistor,chip1206	S12L	2,2 Kohm	12222
	Resistor,chip1206	S12H	22 Kohm	12223
	Resistor,chip1206	SSWL	4,7 Kohm	12472
	Resistor,chip1206	SSWH	47 Kohm	12473
	Resistor,chip1206	D25L	100 Ohm	12101
	Resistor,chip1206	D25H	100 Kohm	12104
	Resistor,chip1206	D12L	220 Ohm	12221
	Resistor,chip1206	D12H	220 Kohm	12224
	Resistor,chip1206	DSWL	470 Ohm	12471
	Resistor,chip1206	DSWH	470 Kohm	12474
	Resistor,chip1206	B25L	68 Ohm	12680
	Resistor,chip1206	B25H	82 Ohm	12820
	Resistor,chip1206	B12L	680 Ohm	12681
	Resistor,chip1206	B12H	820 Ohm	12821
	Resistor,chip1206	BSWL	6,8 Kohm	12682
	Resistor,chip1206	BSWH	8,2 Kohm	12822
V2	Resistor,chip1206	S25L	1 Kohm	12102
	Resistor,chip1206	S25H	10 Kohm	12103
	Resistor,chip1206	S12L	2,2 Kohm	12222
	Resistor,chip1206	S12H	22 Kohm	12223
	Resistor,chip1206	SSWL	4,7 Kohm	12472
	Resistor,chip1206	SSWH	47 Kohm	12473
	Resistor,chip1206	D25L	100 Ohm	12101
	Resistor,chip1206	D25H	100 Kohm	12104
	Resistor,chip1206	D12L	220 Ohm	12221
	Resistor,chip1206	D12H	220 Kohm	12224
	Resistor,chip1206	DSWL	470 Ohm	12471
	Resistor,chip1206	DSWH	470 Kohm	12474
	Resistor,chip1206	B25L	68 Ohm	12680
	Resistor,chip1206	B25H	82 Ohm	12820
	Resistor,chip1206	B12L	680 Ohm	12681
	Resistor,chip1206	B12H	820 Ohm	12821
	Resistor,chip1206	BSWL	6,8 Kohm	12682
	Resistor,chip1206	BSWH	8,2 Kohm	12822

p. 52 of 54 PC. Board No. 790-7

Copyright © 2004

Partlist for Radioboard TRX3001D/TRDX3001D Date 07-03-2006
Drawing No. 0-3008-03-8 Unit No. 3000

Component	Description		Value	Niros No.
	Lpf_shield	S25L	0 pcs	
	Lpf_shield	S25H	0 pcs	
	Lpf_shield	S12L	0 pcs	
	Lpf_shield	S12H	0 pcs	
	Lpf_shield	SSWL	0 pcs	
	Lpf_shield	SSWH	0 pcs	
	Lpf_shield	D25L	1 pcs	98204
	Lpf_shield	D25H	1 pcs	98204
	Lpf_shield	D12L	1 pcs	98204
	Lpf_shield	D12H	1 pcs	98204
	Lpf_shield	DSWL	1 pcs	98204
	Lpf_shield	DSWH	1 pcs	98204
	Lpf_shield	B25L	1 pcs	98204
	Lpf_shield	B25H	1 pcs	98204
	Lpf_shield	B12L	1 pcs	98204
	Lpf_shield	B12H	1 pcs	98204
	Lpf_shield	BSWL	1 pcs	98204
	Lpf_shield	BSWH	1 pcs	98204
	Lpf_shield_lid	S25L	0 pcs	
	Lpf_shield_lid	S25H	0 pcs	
	Lpf_shield_lid	S12L	0 pcs	
	Lpf_shield_lid	S12H	0 pcs	
	Lpf_shield_lid	SSWL	0 pcs	
	Lpf_shield_lid	SSWH	0 pcs	
	Lpf_shield_lid	D25L	1 pcs	98205
	Lpf_shield_lid	D25H	1 pcs	98205
	Lpf_shield_lid	D12L	1 pcs	98205
	Lpf_shield_lid	D12H	1 pcs	98205
	Lpf_shield_lid	DSWL	1 pcs	98205
	Lpf_shield_lid	DSWH	1 pcs	98205
	Lpf_shield_lid	B25L	1 pcs	98205
	Lpf_shield_lid	B25H	1 pcs	98205
	Lpf_shield_lid	B12L	1 pcs	98205
	Lpf_shield_lid	B12H	1 pcs	98205
	Lpf_shield_lid	BSWL	1 pcs	98205
	Lpf_shield_lid	BSWH	1 pcs	98205
	Rx_coax	S25L	0 pcs	
	Rx_coax	S25H	0 pcs	
	Rx_coax	S12L	0 pcs	
	Rx_coax	S12H	0 pcs	
	Rx_coax	SSWL	0 pcs	
	Rx_coax	SSWH	0 pcs	
	Rx_coax	D25L	1 pcs	83397
	Rx_coax	D25H	1 pcs	83397
	Rx_coax	D12L	1 pcs	83397
	Rx_coax	D12H	1 pcs	83397
	Rx_coax	DSWL	1 pcs	83397
	Rx_coax	DSWH	1 pcs	83397
	Rx_coax	B25L	0 pcs	
	Rx_coax	B25H	0 pcs	
	Rx_coax	B12L	0 pcs	

p. 53 of 54 PC. Board No. 790-7

Copyright © 2004

Partlist for Radioboard TRX3001D/TRDX3001D Date 07-03-2006
Drawing No. 0-3008-03-8 Unit No. 3000

Component	Description		Value	Niros No.
	Rx_coax	B12H	0 pcs	
	Rx_coax	BSWL	0 pcs	
	Rx_coax	BSWH	0 pcs	
	Heat_sink_compound	S25L	0 pcs	
	Heat_sink_compound	S25H	0 pcs	
	Heat_sink_compound	S12L	0 pcs	
	Heat_sink_compound	S12H	0 pcs	
	Heat_sink_compound	SSWL	0 pcs	
	Heat_sink_compound	SSWH	0 pcs	
	Heat_sink_compound	D25L	1 pcs	84006
	Heat_sink_compound	D25H	1 pcs	84006
	Heat_sink_compound	D12L	1 pcs	84006
	Heat_sink_compound	D12H	1 pcs	84006
	Heat_sink_compound	DSWL	1 pcs	84006
	Heat_sink_compound	DSWH	1 pcs	84006
	Heat_sink_compound	B25L	1 pcs	84006
	Heat_sink_compound	B25H	1 pcs	84006
	Heat_sink_compound	B12L	1 pcs	84006
	Heat_sink_compound	B12H	1 pcs	84006
	Heat_sink_compound	BSWL	1 pcs	84006
	Heat_sink_compound	BSWH	1 pcs	84006
	Pc_board_no. 790-7		1 pcs	95790
	Vco_shield		4 pcs	98162
	Vco_lid	S25L	2 pcs	98163
	Vco_lid	S25H	2 pcs	98163
	Vco_lid	S12L	2 pcs	98163
	Vco_lid	S12H	2 pcs	98163
	Vco_lid	SSWL	2 pcs	98163
	Vco_lid	SSWH	2 pcs	98163
	Vco_lid	D25L	4 pcs	98163
	Vco_lid	D25H	4 pcs	98163
	Vco_lid	D12L	4 pcs	98163
	Vco_lid	D12H	4 pcs	98163
	Vco_lid	DSWL	4 pcs	98163
	Vco_lid	DSWH	4 pcs	98163
	Vco_lid	B25L	4 pcs	98163
	Vco_lid	B25H	4 pcs	98163
	Vco_lid	B12L	4 pcs	98163
	Vco_lid	B12H	4 pcs	98163
	Vco_lid	BSWL	4 pcs	98163
	Vco_lid	BSWH	4 pcs	98163
	Gnd_spring		2 pcs	98221
	Gnd_spring		1 pcs	98222

p. 54 of 54 PC. Board No. 790-7

Copyright © 2004

13. Option board TRDX3001

Copyright © 2004

13.1 Diagram

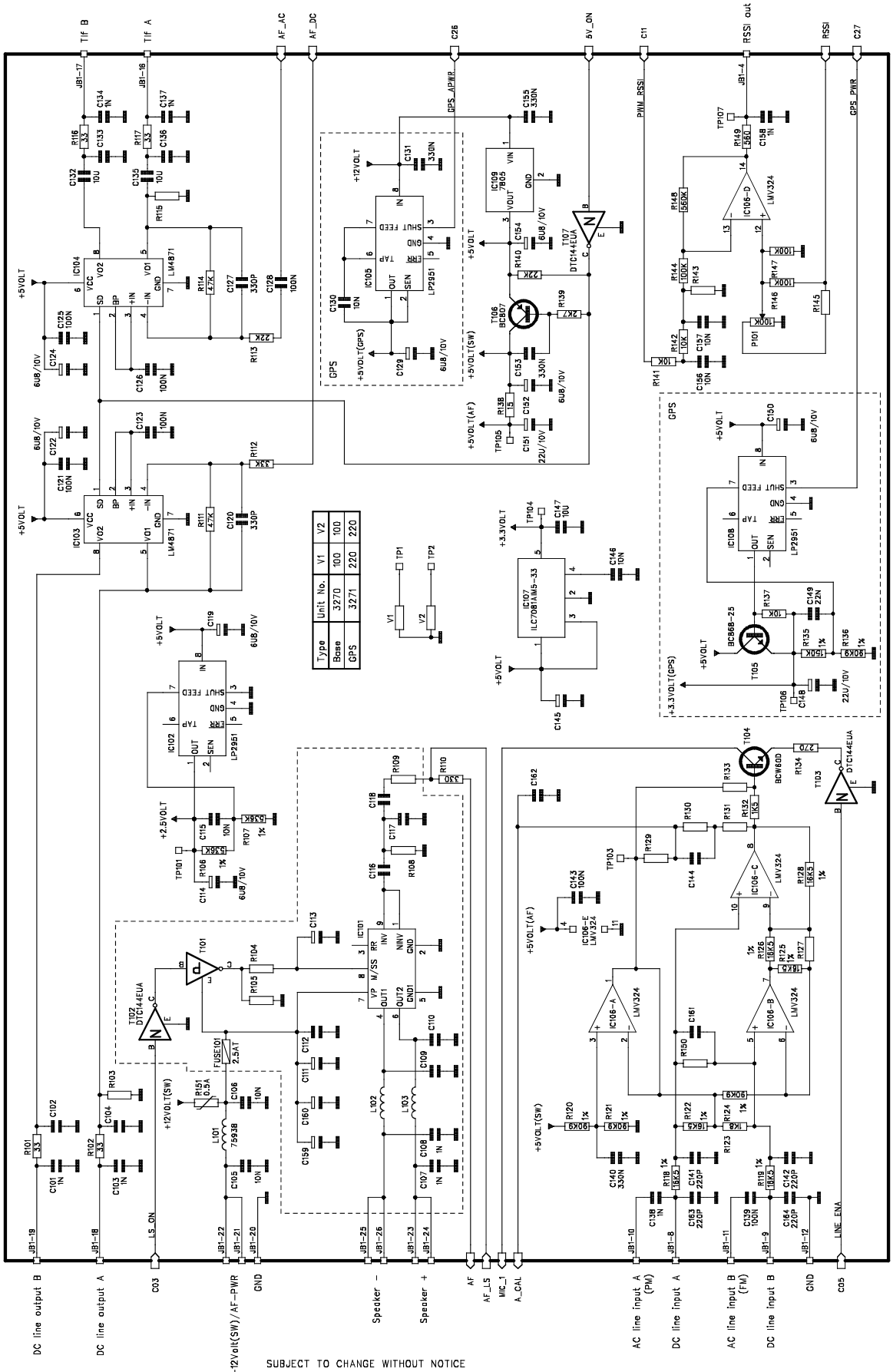

SUBJECT TO CHANGE WITHOUT NOTICE

Option board Full size
Option board Base Unit No.: 3270
Option board with GPS Unit No.: 3271

Date: 9-4-02 Sign: PA	3	NIROS TELECOMMUNICATION A/S Hirsemarken 5, 3520 Farum	Option board TRDX3001	
Date: 11-10-02 Sign: PA	4			
Drawing No.: 0-3009-03-4 p 1 of 4		PC. Board No.: 797-3		

Copyright © 2004

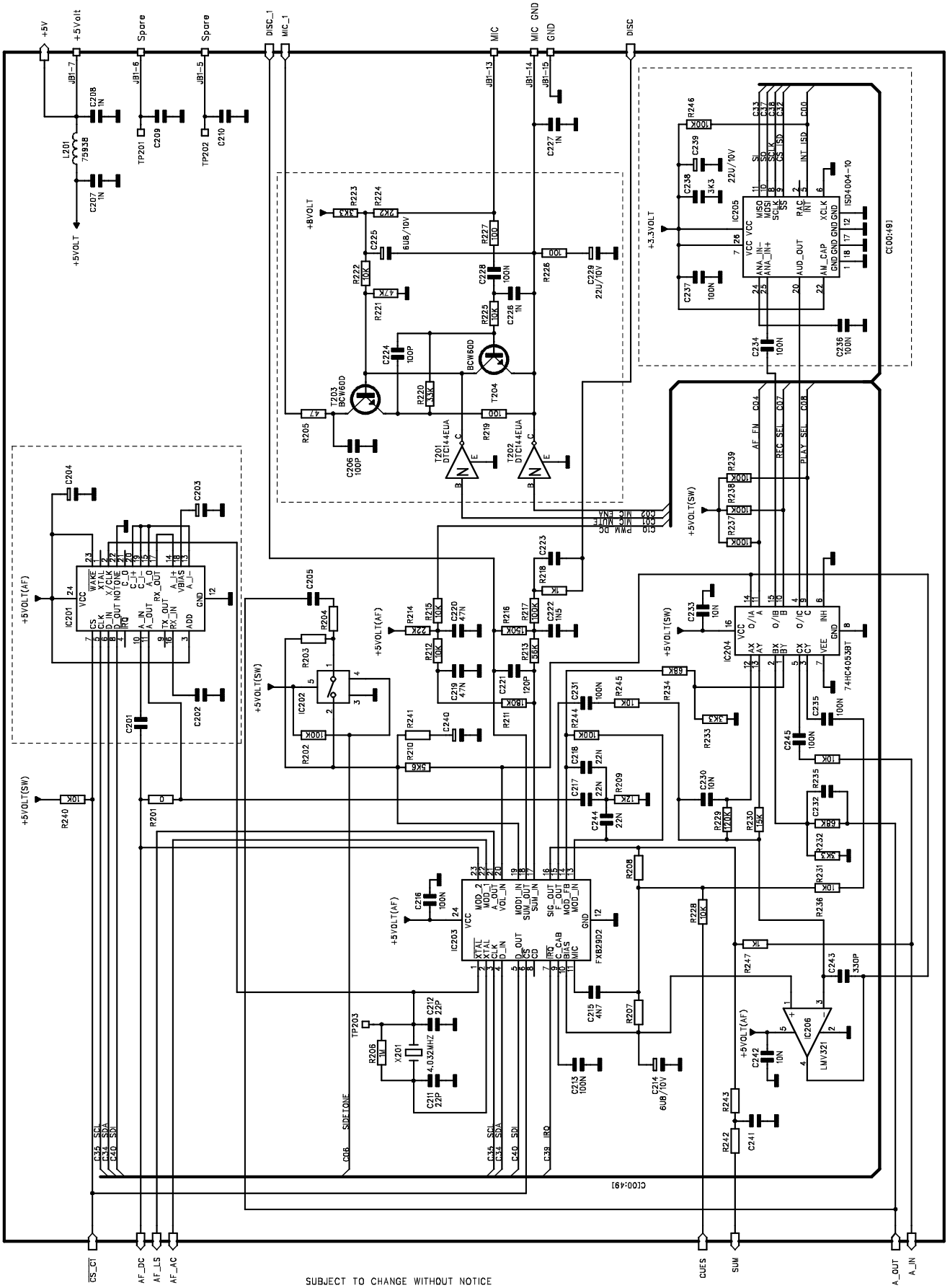

SUBJECT TO CHANGE WITHOUT NOTICE

Date: 9-4-02	Sign: PA	3	NIROS TELECOMMUNICATION A/S Hirsemarken 5, 3520 Farum	Option board TRDX3001
Date: 11-10-02	Sign: PA	4		
Drawing No.: 0-3009-03-4 p 2 of 4			PC. Board No.: 797-3	

Option board Full size
Option board Base Unit No.: 3270
Option board with GPS Unit No.: 3271

Copyright © 2004

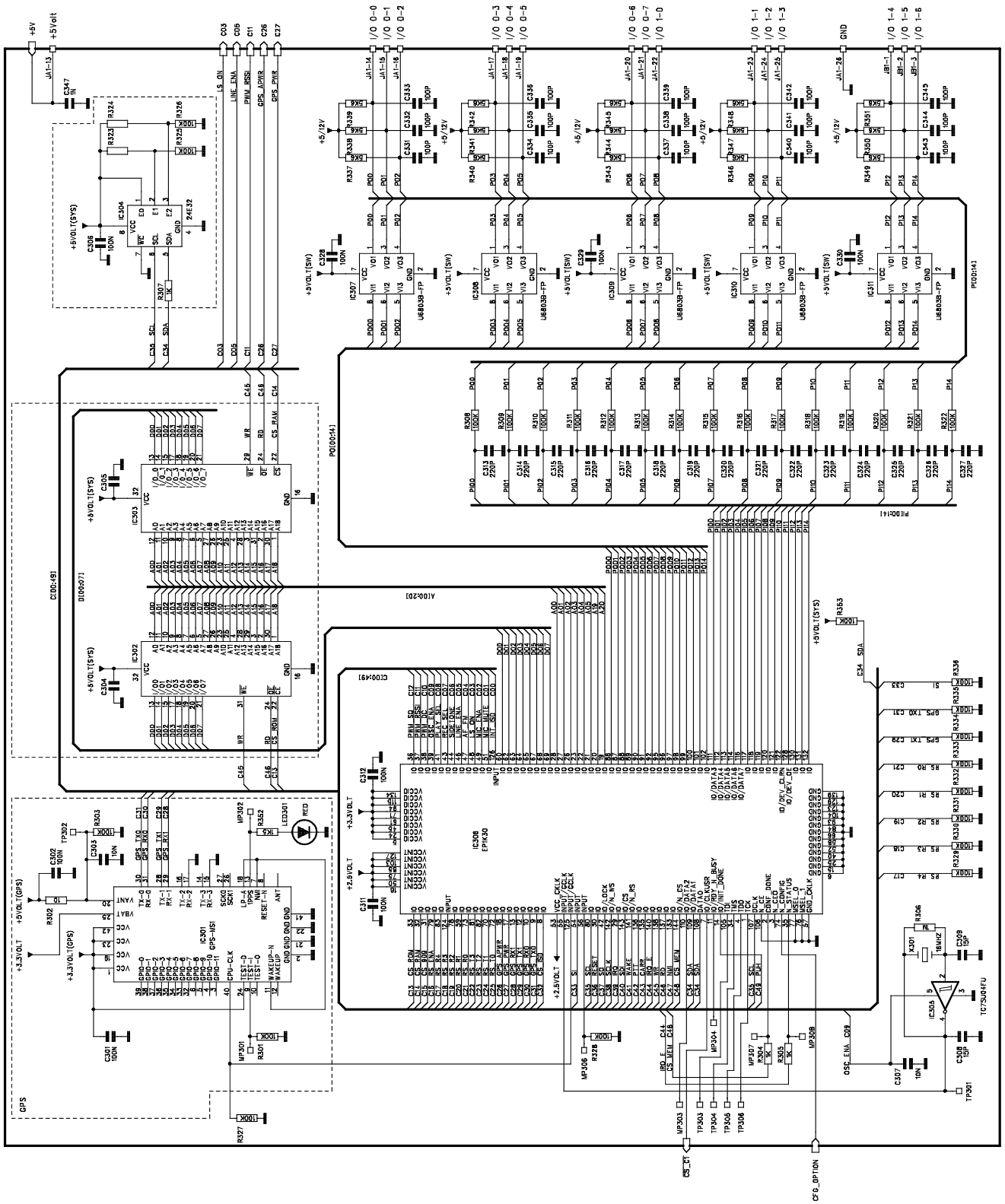

SUBJECT TO CHANGE WITHOUT NOTICE

Option board Full size
Option board Base Unit No.: 3270
Option board with GPS Unit No.: 3271

Date: 9-4-02	Sign: PA	3	NIROS TELECOMMUNICATION A/S Hirsemarken 5, 3520 Farum	Option board TRDX3001
Date: 11-10-02	Sign: PA	4		
Drawing No.: 0-3009-03-4 p 3 of 4			PC. Board No.: 797-3	

Copyright © 2004

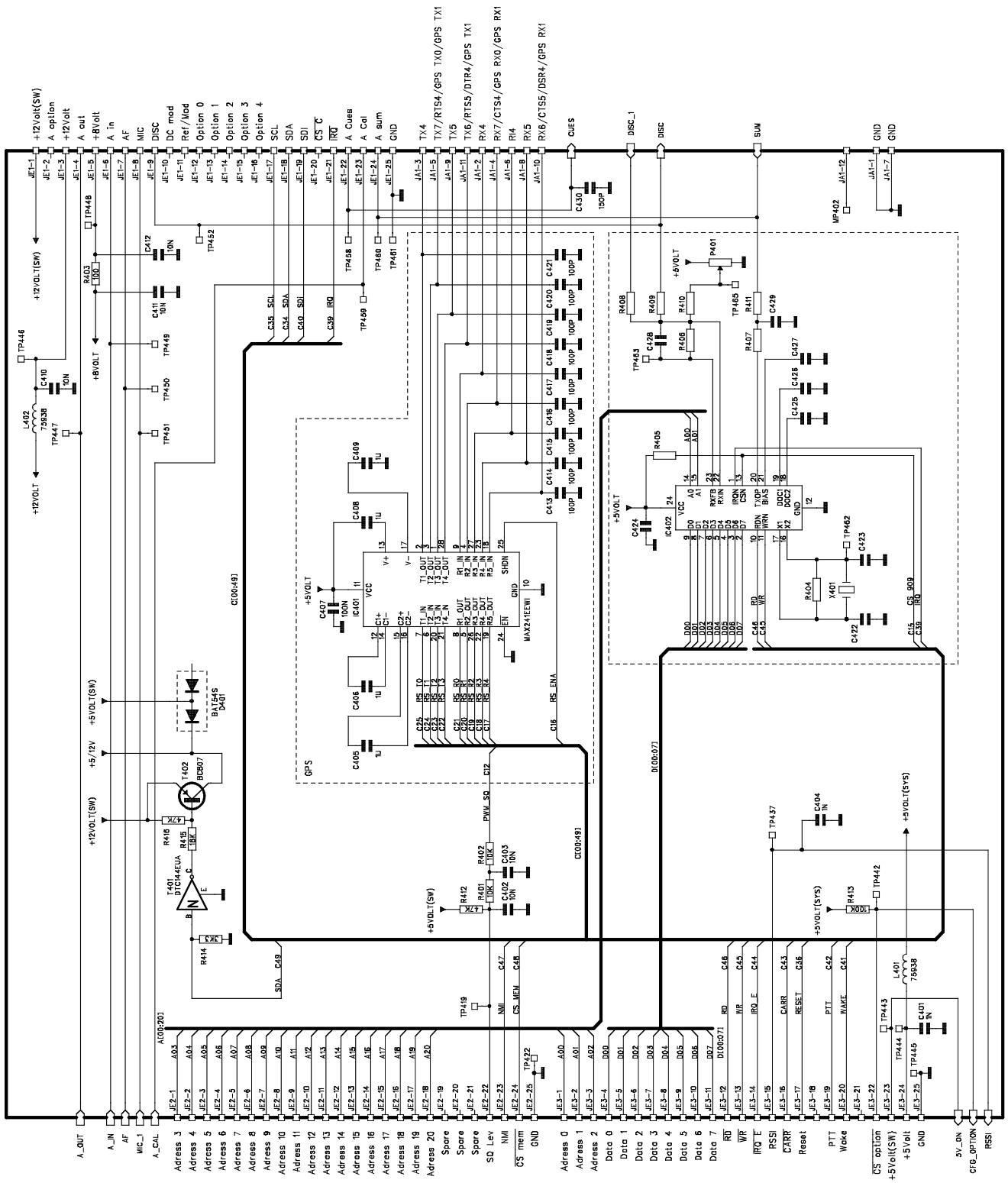

SUBJECT TO CHANGE WITHOUT NOTICE

Option board Full size
Option board Base Unit No.: 3270
Option board with GPS Unit No.: 3271

Date: 9-4-02	Sign: PA	3	NIROS TELECOMMUNICATION A/S Hirsemarken 5, 3520 Farum	Option board TRDX3001
Date: 11-10-02	Sign: PA	4		
Drawing No.: 0-3009-03-4 p 4 of 4			PC. Board No.: 797-3	

Copyright © 2004

13.2 Componentside

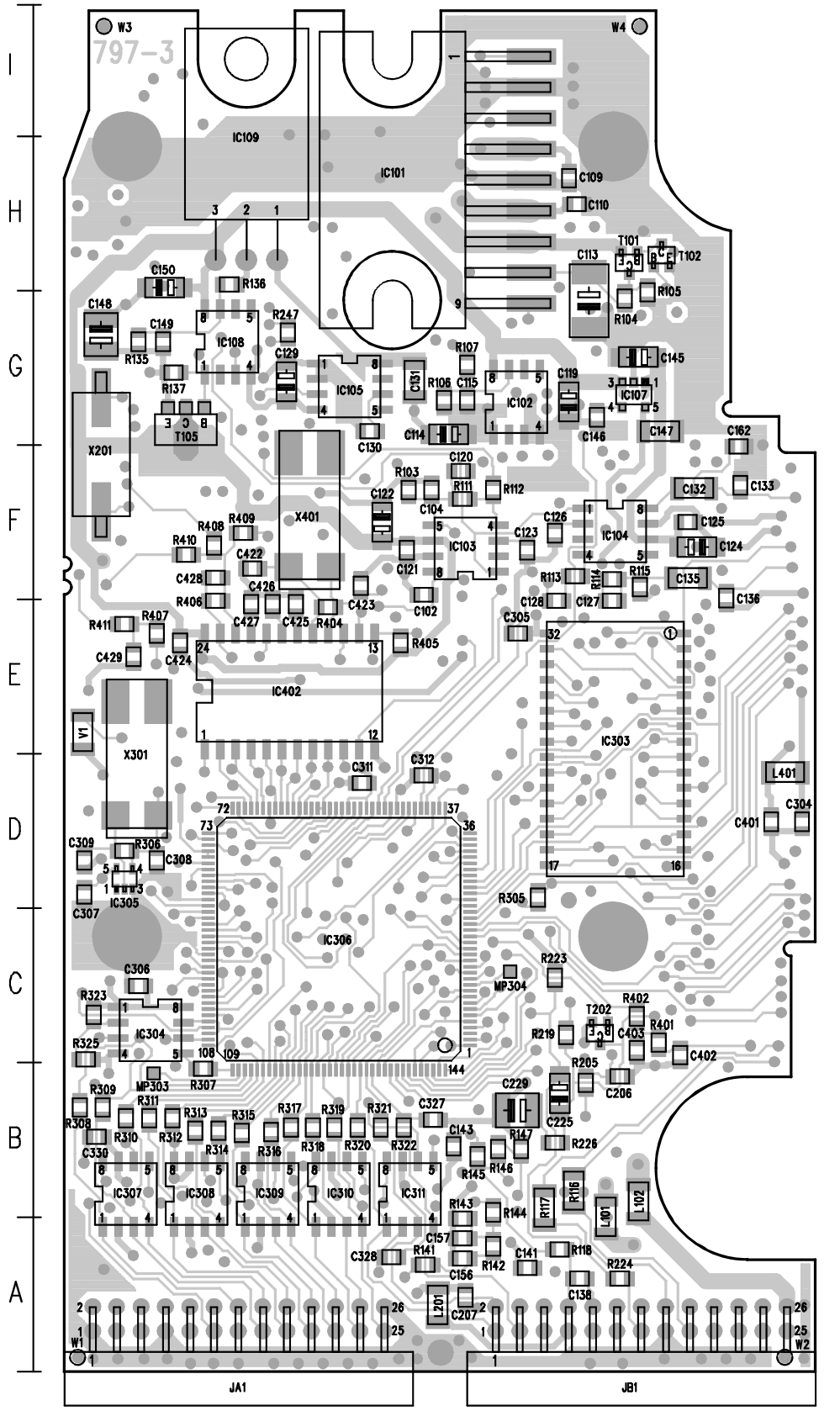

Componentside 797-3

SUBJECT TO CHANGE WITHOUT NOTICE

Option board Full size
Option board Base Unit No.: 3270
Option board with GPS Unit No.: 3271

Date: 9-4-02 Sign: PA	3	NIROS TELECOMMUNICATION A/S Hirsemarken 5, 3520 Farum	Option board TRDX3001	
Date: 11-10-02 Sign: PA	4			
Drawing No.: 0-3009-05-4		PC. Board No.: 797-3		

Copyright © 2004

13.3 Wiringside

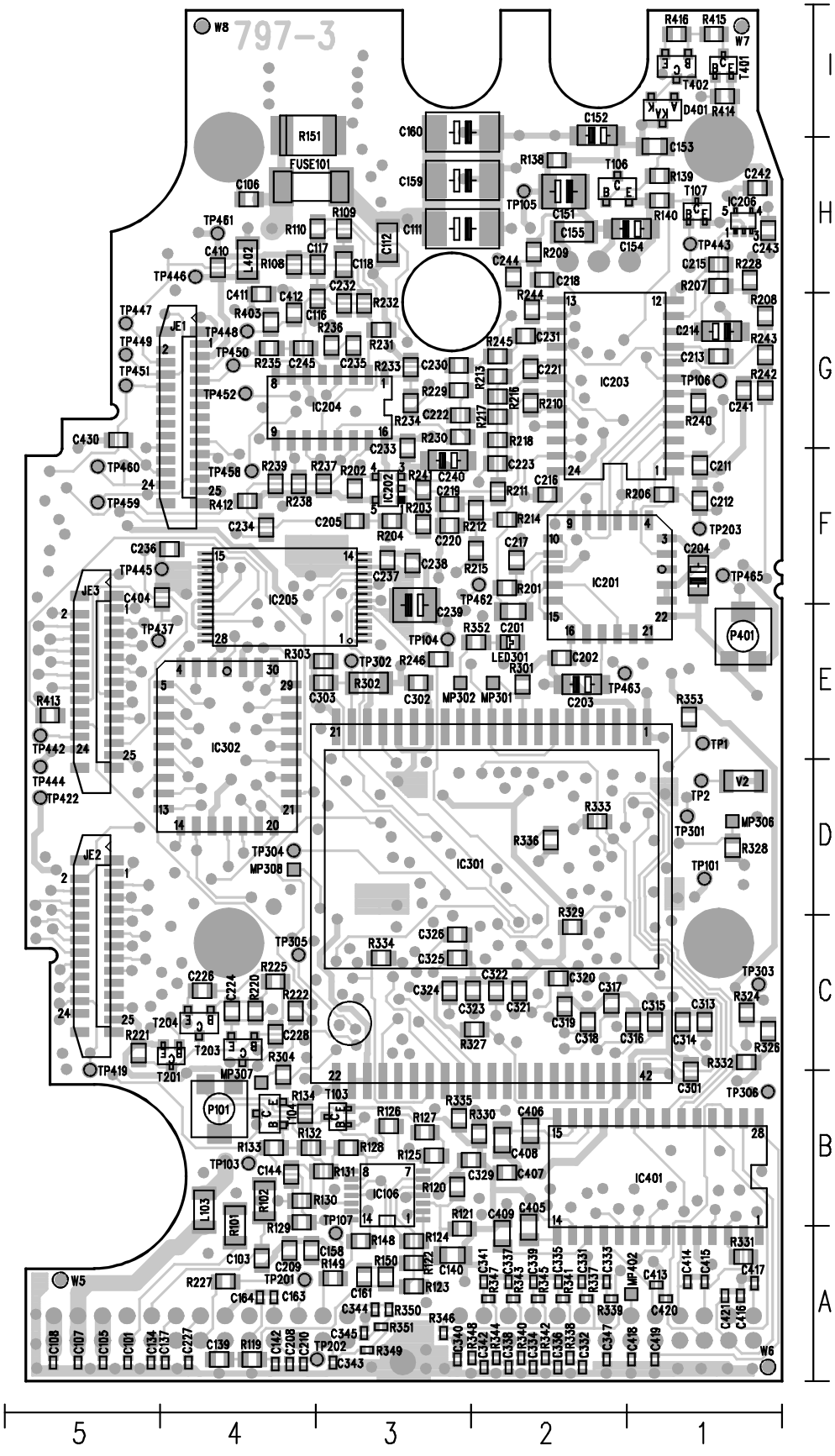

Wiringside 797-3

SUBJECT TO CHANGE WITHOUT NOTICE

Option board Full size
Option board Base Unit No.: 3270
Option board with GPS Unit No.: 3271

Date: 9-4-02 Sign: PA	3	NIROS TELECOMMUNICATION A/S Hirsemarken 5, 3520 Farum		Option board TRDX3001
Date: 11-10-02 Sign: PA	4			
Drawing No.: 0-3009-04-4		PC. Board No.: 797-3		

Copyright © 2004

13.4 Connector/Modul port

JA1-1	GND	S4	**JB1-1**	I/O 1-4	S3
JA1-2	GND	S4	**JB1-2**	I/O 1-5	S3
JA1-3			**JB1-3**	I/O 1-6	S3
JA1-4			**JB1-4**	RSSI out	S1
JA1-5			**JB1-5**	Spare	S2
JA1-6			**JB1-6**	Spare	S2
JA1-7			**JB1-7**	+5Volt	S2
JA1-8			**JB1-8**	DC line input A	S1
JA1-9			**JB1-9**	DC line input B	S1
JA1-10			**JB1-10**	AC line input A (PM)	S1
JA1-11			**JB1-11**	AC line input B (FM)	S1
JA1-12	MP402	S4	**JB1-12**	GND	S1
JA1-13	+5Volt	S3	**JB1-13**	MIC	S2
JA1-14	I/O 0-0	S3	**JB1-14**	MIC GND	S2
JA1-15	I/O 0-1	S3	**JB1-15**	GND	S2
JA1-16	I/O 0-2	S3	**JB1-16**	Tlf A	S1
JA1-17	I/O 0-3	S3	**JB1-17**	Tlf B	S1
JA1-18	I/O 0-4	S3	**JB1-18**	DC line output A	S1
JA1-19	I/O 0-5	S3	**JB1-19**	DC line output B	S1
JA1-20	I/O 0-6	S3	**JB1-20**	GND	S1
JA1-21	I/O 0-7	S3	**JB1-21**	+12Volt(SW)/AF-PWR	S1
JA1-22	I/O 1-0	S3	**JB1-22**	+12Volt(SW)/AF-PWR	S1
JA1-23	I/O 1-1	S3	**JB1-23**	Speaker +	S1
JA1-24	I/O 1-2	S3	**JB1-24**	Speaker +	S1
JA1-25	I/O 1-3	S3	**JB1-25**	Speaker -	S1
JA1-26	GND	S3	**JB1-26**	Speaker -	S1
JE1-1	+12Volt(SW)	S4	**JE2-1**	Adress 3	S4
JE1-2	A option	S4	**JE2-2**	Adress 4	S4
JE1-3	+12Volt	S4	**JE2-3**	Adress 5	S4
JE1-4	A out	S4	**JE2-4**	Adress 6	S4
JE1-5	+8Volt	S4	**JE2-5**	Adress 7	S4
JE1-6	A in	S4	**JE2-6**	Adress 8	S4
JE1-7	AF	S4	**JE2-7**	Adress 9	S4
JE1-8	MIC	S4	**JE2-8**	Adress 10	S4
JE1-9	DISC	S4	**JE2-9**	Adress 11	S4
JE1-10	DC mod	S4	**JE2-10**	Adress 12	S4
JE1-11	Ref/Mod	S4	**JE2-11**	Adress 13	S4
JE1-12	Option 0	S4	**JE2-12**	Adress 14	S4
JE1-13	Option 1	S4	**JE2-13**	Adress 15	S4
JE1-14	Option 2	S4	**JE2-14**	Adress 16	S4
JE1-15	Option 3	S4	**JE2-15**	Adress 17	S4
JE1-16	Option 4	S4	**JE2-16**	Adress 18	S4
JE1-17	SCL	S4	**JE2-17**	Adress 19	S4
JE1-18	SDA	S4	**JE2-18**	Adress 20	S4
JE1-19	SDI	S4	**JE2-19**	Spare	S4
JE1-20	\CS C	S4	**JE2-20**	Spare	S4
JE1-21	\IRQ	S4	**JE2-21**	Spare	S4
JE1-22	A Cues	S4	**JE2-22**	SQ Lev	S4
JE1-23	A Cal	S4	**JE2-23**	NMI	S4
JE1-24	A Sum	S4	**JE2-24**	\CS mem	S4
JE1-25	GND	S4	**JE2-25**	GND	S4

Copyright © 2004

JE3-1	Adress 0	S4	**Modul port**	**S1**	**S2**	**S3**	**S4**
JE3-2	Adress 1	S4	**A_CAL**	X			X
JE3-3	Adress 2	S4	**A_IN**		X		X
JE3-4	Data 0	S4	**A_OUT**		X		X
JE3-5	Data 1	S4	**AF**	X			X
JE3-6	Data 2	S4	**AF_AC**	X	X		
JE3-7	Data 3	S4	**AF_DC**	X	X		
JE3-8	Data 4	S4	**AF_LS**	X	X		
JE3-9	Data 5	S4	**CFG_OPTION**			X	X
JE3-10	Data 6	S4	**CUES**		X		X
JE3-11	Data 7	S4	**\CS_C1**		X	X	
JE3-12	\RD	S4	**DISC**		X		X
JE3-13	\WR	S4	**DISC_1**		X		X
JE3-14	\IRQ E	S4	**MIC_1**	X	X		X
JE3-15	RSSI	S4	**RSSI**	X			X
JE3-16	\CARR	S4	**SUM**		X		X
JE3-17	Reset	S4	**5V_ON**	X			X
JE3-18			**+5V**		X	X	
JE3-19	PTT	S4					
JE3-20	Wake	S4					
JE3-21							
JE3-22	\CS option	S4					
JE3-23	+5Volt(SW)	S4					
JE3-24	+5Volt	S4					
JE3-25	GND	S4					

Copyright © 2004

13.5 Fieldlist

TEXT Option board TRDX3001 DATE 11-10-02
DRAWING NO. 0-3009-03-4 UNIT NO. 3270

Component	Type	Side	Cord	Component	Type	Side	Cord
R101	SMT	BOTTOM	B4	R203	SMT	BOTTOM	F3
R102	SMT	BOTTOM	B4	R204	SMT	BOTTOM	F3
R103	SMT	TOP	F3	R205	SMT	TOP	B4
R104	SMT	TOP	G4	R206	SMT	BOTTOM	F1
R105	SMT	TOP	G4	R207	SMT	BOTTOM	H1
R106	SMT	TOP	G3	R208	SMT	BOTTOM	G1
R107	SMT	TOP	G3	R209	SMT	BOTTOM	H2
R108	SMT	BOTTOM	H4	R210	SMT	BOTTOM	G2
R109	SMT	BOTTOM	H3	R211	SMT	BOTTOM	F2
R110	SMT	BOTTOM	H3	R212	SMT	BOTTOM	F2
R111	SMT	TOP	F3	R213	SMT	BOTTOM	G2
R112	SMT	TOP	F3	R214	SMT	BOTTOM	F2
R113	SMT	TOP	F4	R215	SMT	BOTTOM	F2
R114	SMT	TOP	F4	R216	SMT	BOTTOM	G2
R115	SMT	TOP	F4	R217	SMT	BOTTOM	G2
R116	SMT	TOP	B4	R218	SMT	BOTTOM	G2
R117	SMT	TOP	B4	R219	SMT	TOP	C4
R118	SMT	TOP	A4	R220	SMT	BOTTOM	C4
R119	SMT	BOTTOM	A4	R221	SMT	BOTTOM	C5
R120	SMT	BOTTOM	B3	R222	SMT	BOTTOM	C4
R121	SMT	BOTTOM	A3	R223	SMT	TOP	C4
R122	SMT	BOTTOM	A3	R224	SMT	TOP	A4
R123	SMT	BOTTOM	A3	R225	SMT	BOTTOM	C4
R124	SMT	BOTTOM	A3	R226	SMT	TOP	B4
R125	SMT	BOTTOM	B3	R227	SMT	BOTTOM	A4
R126	SMT	BOTTOM	B3	R228	SMT	BOTTOM	H1
R127	SMT	BOTTOM	B3	R229	SMT	BOTTOM	G3
R128	SMT	BOTTOM	B3	R230	SMT	BOTTOM	G3
R129	SMT	BOTTOM	B4	R231	SMT	BOTTOM	G3
R130	SMT	BOTTOM	B4	R232	SMT	BOTTOM	G3
R131	SMT	BOTTOM	B3	R233	SMT	BOTTOM	G3
R132	SMT	BOTTOM	B4	R234	SMT	BOTTOM	G3
R133	SMT	BOTTOM	B4	R235	SMT	BOTTOM	G4
R134	SMT	BOTTOM	B4	R236	SMT	BOTTOM	G3
R135	SMT	TOP	G1	R237	SMT	BOTTOM	F3
R136	SMT	TOP	H2	R238	SMT	BOTTOM	F4
R137	SMT	TOP	G1	R239	SMT	BOTTOM	F4
R138	SMT	BOTTOM	H2	R240	SMT	BOTTOM	G1
R139	SMT	BOTTOM	H1	R241	SMT	BOTTOM	F3
R140	SMT	BOTTOM	H1	R242	SMT	BOTTOM	G1
R141	SMT	TOP	A3	R243	SMT	BOTTOM	G1
R142	SMT	TOP	A3	R244	SMT	BOTTOM	G2
R143	SMT	TOP	A3	R245	SMT	BOTTOM	G2
R144	SMT	TOP	B3	R246	SMT	BOTTOM	E3
R145	SMT	TOP	B3	R247	SMT	TOP	G2
R146	SMT	TOP	B3	R301	SMT	BOTTOM	E2
R147	SMT	TOP	B3	R302	SMT	BOTTOM	E3
R148	SMT	BOTTOM	A3	R303	SMT	BOTTOM	E3
R149	SMT	BOTTOM	A3	R304	SMT	BOTTOM	B4
R150	SMT	BOTTOM	A3	R305	SMT	TOP	D4
R151	SMT	BOTTOM	I4	R306	SMT	TOP	D1
R201	SMT	BOTTOM	F2	R307	SMT	TOP	B1
R202	SMT	BOTTOM	F3	R308	SMT	TOP	B1

p. 1 of 5 PC. Board No. 797-3

Copyright © 2004

TEXT Option board TRDX3001 DATE 11-10-02
DRAWING NO. 0-3009-03-4 UNIT NO. 3270

Component	Type	Side	Cord	Component	Type	Side	Cord
R309	SMT	TOP	B1	R409	SMT	TOP	F2
R310	SMT	TOP	B1	R410	SMT	TOP	F1
R311	SMT	TOP	B1	R411	SMT	TOP	E1
R312	SMT	TOP	B1	R412	SMT	BOTTOM	F4
R313	SMT	TOP	B1	R413	SMT	BOTTOM	E5
R314	SMT	TOP	B2	R414	SMT	BOTTOM	I1
R315	SMT	TOP	B2	R415	SMT	BOTTOM	I1
R316	SMT	TOP	B2	R416	SMT	BOTTOM	I1
R317	SMT	TOP	B2	P101	SMT	BOTTOM	B4
R318	SMT	TOP	B2	P401	SMT	BOTTOM	E1
R319	SMT	TOP	B2	C101	SMT	BOTTOM	A5
R320	SMT	TOP	B2	C102	SMT	TOP	F3
R321	SMT	TOP	B3	C103	SMT	BOTTOM	A4
R322	SMT	TOP	B3	C104	SMT	TOP	F3
R323	SMT	TOP	C1	C105	SMT	BOTTOM	A5
R324	SMT	BOTTOM	C1	C106	SMT	BOTTOM	H4
R325	SMT	TOP	C1	C107	SMT	BOTTOM	A5
R326	SMT	BOTTOM	C1	C108	SMT	BOTTOM	A5
R327	SMT	BOTTOM	C2	C109	SMT	TOP	H4
R328	SMT	BOTTOM	D1	C110	SMT	TOP	H4
R329	SMT	BOTTOM	C2	C111	SMT	BOTTOM	H3
R330	SMT	BOTTOM	B2	C112	SMT	BOTTOM	H3
R331	SMT	BOTTOM	A1	C113	SMT	TOP	G4
R332	SMT	BOTTOM	C1	C114	SMT	TOP	G3
R333	SMT	BOTTOM	D2	C115	SMT	TOP	G3
R334	SMT	BOTTOM	C3	C116	SMT	BOTTOM	G3
R335	SMT	BOTTOM	B3	C117	SMT	BOTTOM	H3
R336	SMT	BOTTOM	D2	C118	SMT	BOTTOM	H3
R337	SMT	BOTTOM	A2	C119	SMT	TOP	G4
R338	SMT	BOTTOM	A2	C120	SMT	TOP	F3
R339	SMT	BOTTOM	A2	C121	SMT	TOP	F3
R340	SMT	BOTTOM	A2	C122	SMT	TOP	F3
R341	SMT	BOTTOM	A2	C123	SMT	TOP	F4
R342	SMT	BOTTOM	A2	C124	SMT	TOP	F5
R343	SMT	BOTTOM	A2	C125	SMT	TOP	F5
R344	SMT	BOTTOM	A2	C126	SMT	TOP	F4
R345	SMT	BOTTOM	A2	C127	SMT	TOP	E4
R346	SMT	BOTTOM	A3	C128	SMT	TOP	E4
R347	SMT	BOTTOM	A2	C129	SMT	TOP	G2
R348	SMT	BOTTOM	A2	C130	SMT	TOP	G2
R349	SMT	BOTTOM	A3	C131	SMT	TOP	G3
R350	SMT	BOTTOM	A3	C132	SMT	TOP	F5
R351	SMT	BOTTOM	A3	C133	SMT	TOP	F5
R352	SMT	BOTTOM	E2	C134	SMT	BOTTOM	A5
R353	SMT	BOTTOM	E1	C135	SMT	TOP	F5
R401	SMT	TOP	C4	C136	SMT	TOP	F5
R402	SMT	TOP	C4	C137	SMT	BOTTOM	A4
R403	SMT	BOTTOM	G4	C138	SMT	TOP	A4
R404	SMT	TOP	E2	C139	SMT	BOTTOM	A4
R405	SMT	TOP	E3	C140	SMT	BOTTOM	A3
R406	SMT	TOP	E1	C141	SMT	TOP	A4
R407	SMT	TOP	E1	C142	SMT	BOTTOM	A4
R408	SMT	TOP	F1	C143	SMT	TOP	B3

p. 2 of 5 PC. Board No. 797-3

Copyright © 2004

TEXT Option board TRDX3001 DATE 11-10-02
DRAWING NO. 0-3009-03-4 UNIT NO. 3270

Component	Type	Side	Cord	Component	Type	Side	Cord
C144	SMT	BOTTOM	B4	C233	SMT	BOTTOM	G3
C145	SMT	TOP	G4	C234	SMT	BOTTOM	F4
C146	SMT	TOP	G4	C235	SMT	BOTTOM	G3
C147	SMT	TOP	G4	C236	SMT	BOTTOM	F4
C148	SMT	TOP	G1	C237	SMT	BOTTOM	F3
C149	SMT	TOP	G1	C238	SMT	BOTTOM	F3
C150	SMT	TOP	H1	C239	SMT	BOTTOM	E3
C151	SMT	BOTTOM	H2	C240	SMT	BOTTOM	F3
C152	SMT	BOTTOM	I2	C241	SMT	BOTTOM	G1
C153	SMT	BOTTOM	H1	C242	SMT	BOTTOM	H1
C154	SMT	BOTTOM	H1	C243	SMT	BOTTOM	H1
C155	SMT	BOTTOM	H2	C244	SMT	BOTTOM	H2
C156	SMT	TOP	A3	C245	SMT	BOTTOM	G4
C157	SMT	TOP	A3	C301	SMT	BOTTOM	B1
C158	SMT	BOTTOM	A4	C302	SMT	BOTTOM	E3
C159	SMT	BOTTOM	H3	C303	SMT	BOTTOM	E3
C160	SMT	BOTTOM	I3	C304	SMT	TOP	D5
C161	SMT	BOTTOM	A3	C305	SMT	TOP	E3
C162	SMT	TOP	F5	C306	SMT	TOP	C1
C163	SMT	BOTTOM	A4	C307	SMT	TOP	D1
C164	SMT	BOTTOM	A4	C308	SMT	TOP	D1
C201	SMT	BOTTOM	E2	C309	SMT	TOP	D1
C202	SMT	BOTTOM	E2	C311	SMT	TOP	D2
C203	SMT	BOTTOM	E2	C312	SMT	TOP	D3
C204	SMT	BOTTOM	F1	C313	SMT	BOTTOM	C1
C205	SMT	BOTTOM	F3	C314	SMT	BOTTOM	C1
C206	SMT	TOP	B4	C315	SMT	BOTTOM	C1
C207	SMT	TOP	A3	C316	SMT	BOTTOM	C1
C208	SMT	BOTTOM	A4	C317	SMT	BOTTOM	C2
C209	SMT	BOTTOM	A4	C318	SMT	BOTTOM	C2
C210	SMT	BOTTOM	A4	C319	SMT	BOTTOM	C2
C211	SMT	BOTTOM	F1	C320	SMT	BOTTOM	C2
C212	SMT	BOTTOM	F1	C321	SMT	BOTTOM	C2
C213	SMT	BOTTOM	G1	C322	SMT	BOTTOM	C2
C214	SMT	BOTTOM	G1	C323	SMT	BOTTOM	C2
C215	SMT	BOTTOM	H1	C324	SMT	BOTTOM	C3
C216	SMT	BOTTOM	F2	C325	SMT	BOTTOM	C3
C217	SMT	BOTTOM	F2	C326	SMT	BOTTOM	C3
C218	SMT	BOTTOM	H2	C327	SMT	TOP	B3
C219	SMT	BOTTOM	F3	C328	SMT	TOP	A3
C220	SMT	BOTTOM	F3	C329	SMT	BOTTOM	B3
C221	SMT	BOTTOM	G2	C330	SMT	TOP	B1
C222	SMT	BOTTOM	G3	C331	SMT	BOTTOM	A2
C223	SMT	BOTTOM	F2	C332	SMT	BOTTOM	A2
C224	SMT	BOTTOM	C4	C333	SMT	BOTTOM	A2
C225	SMT	TOP	B4	C334	SMT	BOTTOM	A2
C226	SMT	BOTTOM	C4	C335	SMT	BOTTOM	A2
C227	SMT	BOTTOM	A4	C336	SMT	BOTTOM	A2
C228	SMT	BOTTOM	C4	C337	SMT	BOTTOM	A2
C229	SMT	TOP	B3	C338	SMT	BOTTOM	A2
C230	SMT	BOTTOM	G3	C339	SMT	BOTTOM	A2
C231	SMT	BOTTOM	G2	C340	SMT	BOTTOM	A3
C232	SMT	BOTTOM	G3	C341	SMT	BOTTOM	A2

PC. Board No. 797-3

Copyright © 2004

TEXT Option board TRDX3001 DATE 11-10-02
DRAWING NO. 0-3009-03-4 UNIT NO. 3270

Component	Type	Side	Cord	Component	Type	Side	Cord
C342	SMT	BOTTOM	A2	IC101	SMT	TOP	H3
C343	SMT	BOTTOM	A3	IC102	SMT	TOP	G3
C344	SMT	BOTTOM	A3	IC103	SMT	TOP	F3
C345	SMT	BOTTOM	A3	IC104	SMT	TOP	F4
C347	SMT	BOTTOM	A2	IC105	SMT	TOP	G2
C401	SMT	TOP	D5	IC106	SMT	BOTTOM	B3
C402	SMT	TOP	C4	IC107	SMT	TOP	G4
C403	SMT	TOP	C4	IC108	SMT	TOP	G2
C404	SMT	BOTTOM	F4	IC109	LEAD	TOP	H2
C405	SMT	BOTTOM	A2	IC201	SMT	BOTTOM	F2
C406	SMT	BOTTOM	B2	IC202	SMT	BOTTOM	F3
C407	SMT	BOTTOM	B2	IC203	SMT	BOTTOM	G2
C408	SMT	BOTTOM	B2	IC204	SMT	BOTTOM	G3
C409	SMT	BOTTOM	A2	IC205	SMT	BOTTOM	F4
C410	SMT	BOTTOM	H4	IC206	SMT	BOTTOM	H1
C411	SMT	BOTTOM	G4	IC301	SMT	BOTTOM	D2
C412	SMT	BOTTOM	G4	IC302	SMT	BOTTOM	E4
C413	SMT	BOTTOM	A1	IC303	SMT	TOP	E4
C414	SMT	BOTTOM	A1	IC304	SMT	TOP	C1
C415	SMT	BOTTOM	A1	IC305	SMT	TOP	D1
C416	SMT	BOTTOM	A1	IC306	SMT	TOP	C2
C417	SMT	BOTTOM	A1	IC307	SMT	TOP	B1
C418	SMT	BOTTOM	A1	IC308	SMT	TOP	B1
C419	SMT	BOTTOM	A1	IC309	SMT	TOP	B2
C420	SMT	BOTTOM	A1	IC310	SMT	TOP	B2
C421	SMT	BOTTOM	A1	IC311	SMT	TOP	B3
C422	SMT	TOP	F2	IC401	SMT	BOTTOM	B1
C423	SMT	TOP	F2	IC402	SMT	TOP	E2
C424	SMT	TOP	E1	L101	SMT	TOP	B4
C425	SMT	TOP	E2	L102	SMT	TOP	B4
C426	SMT	TOP	E2	L103	SMT	BOTTOM	B4
C427	SMT	TOP	E2	L201	SMT	TOP	A3
C428	SMT	TOP	F1	L401	SMT	TOP	D5
C429	SMT	TOP	E1	L402	SMT	BOTTOM	H4
C430	SMT	BOTTOM	G5	FUSE101	SMT	BOTTOM	H4
X201	SMT	TOP	F1	TP1	SMT	BOTTOM	E1
X301	SMT	TOP	D1	TP2	SMT	BOTTOM	D1
X401	SMT	TOP	F2	TP101	SMT	BOTTOM	D1
T101	SMT	TOP	H4	TP103	SMT	BOTTOM	B4
T102	SMT	TOP	H4	TP104	SMT	BOTTOM	E3
T103	SMT	BOTTOM	B3	TP105	SMT	BOTTOM	H2
T104	SMT	BOTTOM	B4	TP106	SMT	BOTTOM	G1
T105	SMT	TOP	G1	TP107	SMT	BOTTOM	A3
T106	SMT	BOTTOM	H2	TP201	SMT	BOTTOM	A4
T107	SMT	BOTTOM	H1	TP202	SMT	BOTTOM	A3
T201	SMT	BOTTOM	C4	TP203	SMT	BOTTOM	F1
T202	SMT	TOP	C4	TP301	SMT	BOTTOM	D1
T203	SMT	BOTTOM	C4	TP302	SMT	BOTTOM	E3
T204	SMT	BOTTOM	C4	TP303	SMT	BOTTOM	C1
T401	SMT	BOTTOM	I1	TP304	SMT	BOTTOM	D4
T402	SMT	BOTTOM	I1	TP305	SMT	BOTTOM	C4
D401	SMT	BOTTOM	I1	TP306	SMT	BOTTOM	B1
LED301	SMT	BOTTOM	E2	TP419	SMT	BOTTOM	C5

p. 4 of 5 PC. Board No. 797-3

Copyright © 2004

TEXT Option board TRDX3001 DATE 11-10-02
DRAWING NO. 0-3009-03-4 UNIT NO. 3270

Component	Type	Side	Cord	Component	Type	Side	Cord
TP422	SMT	BOTTOM	D5				
TP437	SMT	BOTTOM	E5				
TP442	SMT	BOTTOM	E5				
TP443	SMT	BOTTOM	H1				
TP444	SMT	BOTTOM	D5				
TP445	SMT	BOTTOM	F4				
TP446	SMT	BOTTOM	H4				
TP447	SMT	BOTTOM	G5				
TP448	SMT	BOTTOM	G4				
TP449	SMT	BOTTOM	G5				
TP450	SMT	BOTTOM	G4				
TP451	SMT	BOTTOM	G5				
TP452	SMT	BOTTOM	G4				
TP458	SMT	BOTTOM	F4				
TP459	SMT	BOTTOM	F5				
TP460	SMT	BOTTOM	F5				
TP461	SMT	BOTTOM	H4				
TP462	SMT	BOTTOM	F2				
TP463	SMT	BOTTOM	E2				
TP465	SMT	BOTTOM	F1				
MP301	SMT	BOTTOM	E2				
MP302	SMT	BOTTOM	E3				
MP303	SMT	TOP	B1				
MP304	SMT	TOP	C3				
MP306	SMT	BOTTOM	D1				
MP307	SMT	BOTTOM	B4				
MP308	SMT	BOTTOM	D4				
MP402	SMT	BOTTOM	A1				
JB1	LEAD	TOP	A4				
JA1	LEAD	TOP	A2				
JE1	SMT	BOTTOM	G4				
JE2	SMT	BOTTOM	C5				
JE3	SMT	BOTTOM	E5				
W1	SMT	TOP	A1				
W2	SMT	TOP	A5				
W3	SMT	TOP	I1				
W4	SMT	TOP	I4				
W5	SMT	BOTTOM	A5				
W6	SMT	BOTTOM	A1				
W7	SMT	BOTTOM	I1				
W8	SMT	BOTTOM	I4				
V1	SMT	TOP	E1				
V2	SMT	BOTTOM	D1				

p. 5 of 5 PC. Board No. 797-3

Copyright © 2004

13.6 Partlist

PARTLIST FOR Option board TRDX3001 DATE 11-10-02
DRAWING NO. 0-3009-03-4 UNIT NO. 3270

Component	Description		Value	Niros No.
	Optionboard TRDX3001		F	
	Optionboard Base TRDX3001		B	3270
	Optionboard GPS TRDX3001		G	3271
R101	Resistor,chip1206		33 Ohm	12330
R102	Resistor,chip1206		33 Ohm	12330
R106	Resistor,chip603_1%		536 Kohm	10931
R107	Resistor,chip603_1%		536 Kohm	10931
R110	Resistor,chip603		330 Ohm	14331
R111	Resistor,chip603		47 Kohm	14473
R112	Resistor,chip603		33 Kohm	14333
R113	Resistor,chip603		22 Kohm	14223
R114	Resistor,chip603		47 Kohm	14473
R116	Resistor,chip1206		33 Ohm	12330
R117	Resistor,chip1206		33 Ohm	12330
R118	Resistor,chip603_1%		16,5 Kohm	10932
R119	Resistor,chip603_1%		16,5 Kohm	10932
R120	Resistor,chip603_1%		90,9 Kohm	10910
R121	Resistor,chip603_1%		90,9 Kohm	10910
R122	Resistor,chip603_1%		16,5 Kohm	10932
R123	Resistor,chip603		1,8 Kohm	14182
R124	Resistor,chip603_1%		90,9 Kohm	10910
R125	Resistor,chip603_1%		16,5 Kohm	10932
R126	Resistor,chip603_1%		16,5 Kohm	10932
R128	Resistor,chip603_1%		16,5 Kohm	10932
R132	Resistor,chip603		1,5 Kohm	14152
R134	Resistor,chip603		270 Ohm	14271
R135	Resistor,chip603_1%	F	150 Kohm	10920
	Resistor,chip603_1%	G	150 Kohm	10920
R136	Resistor,chip603_1%	F	90,9 Kohm	10910
	Resistor,chip603_1%	G	90,9 Kohm	10910
R137	Resistor,chip603	F	10 Kohm	14103
	Resistor,chip603	G	10 Kohm	14103
R138	Resistor,chip603		15 Ohm	14150
R139	Resistor,chip603		2,7 Kohm	14272
R140	Resistor,chip603		22 Kohm	14223
R141	Resistor,chip603		10 Kohm	14103
R142	Resistor,chip603		10 Kohm	14103
R144	Resistor,chip603		100 Kohm	14104
R146	Resistor,chip603		100 Kohm	14104
R147	Resistor,chip603		100 Kohm	14104
R148	Resistor,chip603		560 Kohm	14564
R149	Resistor,chip603		560 Ohm	14561
R151	Resistor,ptc		0.5 A	83364
R201	Resistor,chip603		0 Ohm	14000
R202	Resistor,chip603		100 Kohm	14104
R205	Resistor,chip603	F	47 Ohm	14470

p. 1 of 9 PC. Board No. 797-3

Copyright © 2004

PARTLIST FOR Option board TRDX3001 DATE 11-10-02
DRAWING NO. 0-3009-03-4 UNIT NO. 3270

Component	Description		Value	Niros No.
R206	Resistor,chip603		1 Mohm	14105
R209	Resistor,chip603		12 Kohm	14123
R210	Resistor,chip603		5,6 Kohm	14562
R211	Resistor,chip603		180 Kohm	14184
R212	Resistor,chip603		10 Kohm	14103
R213	Resistor,chip603		56 Kohm	14563
R214	Resistor,chip603		22 Kohm	14223
R215	Resistor,chip603		10 Kohm	14103
R216	Resistor,chip603		150 Kohm	14154
R217	Resistor,chip603		100 Kohm	14104
R218	Resistor,chip603		1 Kohm	14102
R219	Resistor,chip603	F	100 Ohm	14101
R220	Resistor,chip603	F	33 Kohm	14333
R221	Resistor,chip603	F	47 Kohm	14473
R222	Resistor,chip603	F	10 Kohm	14103
R223	Resistor,chip603	F	3,3 Kohm	14332
R224	Resistor,chip603	F	2,2 Kohm	14222
R225	Resistor,chip603	F	10 Kohm	14103
R226	Resistor,chip603	F	100 Ohm	14101
R227	Resistor,chip603	F	100 Ohm	14101
R228	Resistor,chip603		10 Kohm	14103
R229	Resistor,chip603		120 Kohm	14124
R230	Resistor,chip603		15 Kohm	14153
R231	Resistor,chip603		3,3 Kohm	14332
R232	Resistor,chip603		68 Kohm	14683
R233	Resistor,chip603		3,3 Kohm	14332
R234	Resistor,chip603		68 Kohm	14683
R235	Resistor,chip603		10 Kohm	14103
R236	Resistor,chip603		10 Kohm	14103
R237	Resistor,chip603		100 Kohm	14104
R238	Resistor,chip603		100 Kohm	14104
R239	Resistor,chip603		100 Kohm	14104
R240	Resistor,chip603		10 Kohm	14103
R244	Resistor,chip603		100 Kohm	14104
R245	Resistor,chip603		10 Kohm	14103
R246	Resistor,chip603		100 Kohm	14104
R247	Resistor,chip603		1 Kohm	14102
R301	Resistor,chip603	F	100 Kohm	14104
	Resistor,chip603	G	100 Kohm	14104
R302	Resistor,chip1206	F	100 Ohm	12101
	Resistor,chip1206	G	100 Ohm	12101
R303	Resistor,chip603	F	100 Kohm	14104
	Resistor,chip603	G	100 Kohm	14104
R304	Resistor,chip603		1 Kohm	14102
R305	Resistor,chip603		1 Kohm	14102
R306	Resistor,chip603		1 Mohm	14105
R307	Resistor,chip603	F	1 Kohm	14102

p. 2 of 9 PC. Board No. 797-3

Copyright © 2004

PARTLIST FOR Option board TRDX3001 DATE 11-10-02
DRAWING NO. 0-3009-03-4 UNIT NO. 3270

Component	Description		Value	Niros No.
R308	Resistor,chip603		100 Kohm	14104
R309	Resistor,chip603		100 Kohm	14104
R310	Resistor,chip603		100 Kohm	14104
R311	Resistor,chip603		100 Kohm	14104
R312	Resistor,chip603		100 Kohm	14104
R313	Resistor,chip603		100 Kohm	14104
R314	Resistor,chip603		100 Kohm	14104
R315	Resistor,chip603		100 Kohm	14104
R316	Resistor,chip603		100 Kohm	14104
R317	Resistor,chip603		100 Kohm	14104
R318	Resistor,chip603		100 Kohm	14104
R319	Resistor,chip603		100 Kohm	14104
R320	Resistor,chip603		100 Kohm	14104
R321	Resistor,chip603		100 Kohm	14104
R322	Resistor,chip603		100 Kohm	14104
R325	Resistor,chip603	F	100 Kohm	14104
R326	Resistor,chip603	F	100 Kohm	14104
R327	Resistor,chip603		100 Kohm	14104
R328	Resistor,chip603		100 Kohm	14104
R329	Resistor,chip603		100 Kohm	14104
R330	Resistor,chip603		100 Kohm	14104
R331	Resistor,chip603		100 Kohm	14104
R332	Resistor,chip603		100 Kohm	14104
R333	Resistor,chip603		100 Kohm	14104
R334	Resistor,chip603		100 Kohm	14104
R335	Resistor,chip603		100 Kohm	14104
R336	Resistor,chip603		100 Kohm	14104
R337	Resistor,chip402		5,6 Kohm	15562
R338	Resistor,chip402		5,6 Kohm	15562
R339	Resistor,chip402		5,6 Kohm	15562
R340	Resistor,chip402		5,6 Kohm	15562
R341	Resistor,chip402		5,6 Kohm	15562
R342	Resistor,chip402		5,6 Kohm	15562
R343	Resistor,chip402		5,6 Kohm	15562
R344	Resistor,chip402		5,6 Kohm	15562
R345	Resistor,chip402		5,6 Kohm	15562
R346	Resistor,chip402		5,6 Kohm	15562
R347	Resistor,chip402		5,6 Kohm	15562
R348	Resistor,chip402		5,6 Kohm	15562
R349	Resistor,chip402		5,6 Kohm	15562
R350	Resistor,chip402		5,6 Kohm	15562
R351	Resistor,chip402		5,6 Kohm	15562
R352	Resistor,chip603	F	1,5 Kohm	14152
	Resistor,chip603	G	1,5 Kohm	14152
R353	Resistor,chip603		100 Kohm	14104

p. 3 of 9 PC. Board No. 797-3

Copyright © 2004

PARTLIST FOR Option board TRDX3001 DATE 11-10-02
DRAWING NO. 0-3009-03-4 UNIT NO. 3270

Component	Description		Value	Niros No.
R401	Resistor,chip603		10 Kohm	14103
R402	Resistor,chip603		10 Kohm	14103
R403	Resistor,chip603		100 Ohm	14101
R412	Resistor,chip603		47 Kohm	14473
R413	Resistor,chip603		100 Kohm	14104
R414	Resistor,chip603		3,3 Kohm	14332
R415	Resistor,chip603		18 Kohm	14183
R416	Resistor,chip603		47 Kohm	14473
P101	Resistor,pre_set		100 Kohm	19036
C101	Capacitor,chip402		1 nF	23102
C103	Capacitor,chip603		1 nF	21102
C105	Capacitor,chip402		10 nF	23103
C106	Capacitor,chip603		10 nF	21103
C107	Capacitor,chip402		1 nF	23102
C108	Capacitor,chip402		1 nF	23102
C114	Capacitor,ctan_a		6,8 uF/10V	25619
C115	Capacitor,chip603		10 nF	21103
C119	Capacitor,ctan_a		6,8 uF/10V	25619
C120	Capacitor,chip603		330 pF	21331
C121	Capacitor,chip603		100 nF	21104
C122	Capacitor,ctan_a		6,8 uF/10V	25619
C123	Capacitor,chip603		100 nF	21104
C124	Capacitor,ctan_a		6,8 uF/10V	25619
C125	Capacitor,chip603		100 nF	21104
C126	Capacitor,chip603		100 nF	21104
C127	Capacitor,chip603		330 pF	21331
C128	Capacitor,chip603		100 nF	21104
C129	Capacitor,ctan_a	F	6,8 uF/10V	25619
	Capacitor,ctan_a	G	6,8 uF/10V	25619
C130	Capacitor,chip603	F	10 nF	21103
	Capacitor,chip603	G	10 nF	21103
C131	Capacitor,chip1206	F	330 nF	20664
	Capacitor,chip1206	G	330 nF	20664
C132	Capacitor,chip1206		10 uF	20665
C134	Capacitor,chip402		1 nF	23102
C135	Capacitor,chip1206		10 uF	20665
C137	Capacitor,chip402		1 nF	23102
C138	Capacitor,chip603		1 nF	21102
C139	Capacitor,chip603		100 nF	21104
C140	Capacitor,chip805		330 nF	20662
C141	Capacitor,chip603		220 pF	21221
C142	Capacitor,chip402		220 pF	23221
C143	Capacitor,chip603		100 nF	21104
C146	Capacitor,chip603		10 nF	21103

p. 4 of 9 PC. Board No. 797-3

Copyright © 2004

PARTLIST FOR Option board TRDX3001 DATE 11-10-02
DRAWING NO. 0-3009-03-4 UNIT NO. 3270

Component	Description		Value	Niros No.
C147	Capacitor,chip1206		10 uF	20665
C148	Capacitor,ctan_b	F	22 uF/10V	25630
	Capacitor,ctan_b	G	22 uF/10V	25630
C149	Capacitor,chip603	F	22 nF	21223
	Capacitor,chip603	G	22 nF	21223
C150	Capacitor,ctan_a	F	6,8 uF/10V	25619
	Capacitor,ctan_a	G	6,8 uF/10V	25619
C151	Capacitor,ctan_b		22 uF/10V	25630
C152	Capacitor,ctan_a		6,8 uF/10V	25619
C153	Capacitor,chip805		330 nF	20662
C154	Capacitor,ctan_a		6,8 uF/10V	25619
C155	Capacitor,chip1206		330 nF	20664
C156	Capacitor,chip603		10 nF	21103
C157	Capacitor,chip603		10 nF	21103
C158	Capacitor,chip603		1 nF	21102
C163	Capacitor,chip402		220 pF	23221
C164	Capacitor,chip402		220 pF	23221
C206	Capacitor,chip603	F	100 pF	21101
C207	Capacitor,chip603		1 nF	21102
C208	Capacitor,chip402		1 nF	23102
C211	Capacitor,chip603		22 pF	21220
C212	Capacitor,chip603		22 pF	21220
C213	Capacitor,chip603		100 nF	21104
C214	Capacitor,ctan_a		6,8 uF/10V	25619
C215	Capacitor,chip603		4,7 nF	21472
C216	Capacitor,chip603		100 nF	21104
C217	Capacitor,chip603		22 nF	21223
C218	Capacitor,chip603		22 nF	21223
C219	Capacitor,chip603		47 nF	21473
C220	Capacitor,chip603		47 nF	21473
C221	Capacitor,chip603		120 pF	21121
C222	Capacitor,chip603		1,5 nF	21152
C224	Capacitor,chip603	F	100 pF	21101
C225	Capacitor,ctan_a	F	6,8 uF/10V	25619
C226	Capacitor,chip603	F	1 nF	21102
C227	Capacitor,chip402		1 nF	23102
C228	Capacitor,chip603	F	100 nF	21104
C229	Capacitor,ctan_b	F	22 uF/10V	25630
C230	Capacitor,chip603		10 nF	21103
C231	Capacitor,chip603		100 nF	21104
C233	Capacitor,chip603		10 nF	21103
C234	Capacitor,chip603	F	100 nF	21104
C235	Capacitor,chip603		100 nF	21104
C236	Capacitor,chip603	F	100 nF	21104
C237	Capacitor,chip603	F	100 nF	21104
C238	Capacitor,chip603	F	100 nF	21104
	Resistor,chip603	B	3,3 Kohm	14332

p. 5 of 9 PC. Board No. 797-3

Copyright © 2004

PARTLIST FOR Option board TRDX3001 DATE 11-10-02
DRAWING NO. 0-3009-03-4 UNIT NO. 3270

Component	Description		Value	Niros No.
	Resistor,chip603	G	3,3 Kohm	14332
C239	Capacitor,ctan_b	F	22 uF/10V	25630
C242	Capacitor,chip603		10 nF	21103
C243	Capacitor,chip603		330 pF	21331
C244	Capacitor,chip603		22 nF	21223
C245	Capacitor,chip603		100 nF	21104
C301	Capacitor,chip603	F	100 nF	21104
	Capacitor,chip603	G	100 nF	21104
C302	Capacitor,chip603	F	100 nF	21104
	Capacitor,chip603	G	100 nF	21104
C303	Capacitor,chip603	F	10 nF	21103
	Capacitor,chip603	G	10 nF	21103
C306	Capacitor,chip603	F	100 nF	21104
C307	Capacitor,chip603		10 nF	21103
C308	Capacitor,chip603		15 pF	21150
C309	Capacitor,chip603		15 pF	21150
C311	Capacitor,chip603		100 nF	21104
C312	Capacitor,chip603		100 nF	21104
C313	Capacitor,chip603		220 pF	21221
C314	Capacitor,chip603		220 pF	21221
C315	Capacitor,chip603		220 pF	21221
C316	Capacitor,chip603		220 pF	21221
C317	Capacitor,chip603		220 pF	21221
C318	Capacitor,chip603		220 pF	21221
C319	Capacitor,chip603		220 pF	21221
C320	Capacitor,chip603		220 pF	21221
C321	Capacitor,chip603		220 pF	21221
C322	Capacitor,chip603		220 pF	21221
C323	Capacitor,chip603		220 pF	21221
C324	Capacitor,chip603		220 pF	21221
C325	Capacitor,chip603		220 pF	21221
C326	Capacitor,chip603		220 pF	21221
C327	Capacitor,chip603		220 pF	21221
C328	Capacitor,chip603		100 nF	21104
C329	Capacitor,chip603		100 nF	21104
C330	Capacitor,chip603		100 nF	21104
C331	Capacitor,chip402		100 pF	23101
C332	Capacitor,chip402		100 pF	23101
C333	Capacitor,chip402		100 pF	23101
C334	Capacitor,chip402		100 pF	23101
C335	Capacitor,chip402		100 pF	23101
C336	Capacitor,chip402		100 pF	23101
C337	Capacitor,chip402		100 pF	23101
C338	Capacitor,chip402		100 pF	23101
C339	Capacitor,chip402		100 pF	23101
C340	Capacitor,chip402		100 pF	23101
C341	Capacitor,chip402		100 pF	23101

Copyright © 2004

PARTLIST FOR Option board TRDX3001 DATE 11-10-02
DRAWING NO. 0-3009-03-4 UNIT NO. 3270

Component	Description		Value	Niros No.
C342	Capacitor,chip402		100 pF	23101
C343	Capacitor,chip402		100 pF	23101
C344	Capacitor,chip402		100 pF	23101
C345	Capacitor,chip402		100 pF	23101
C347	Capacitor,chip402		1 nF	23102
C401	Capacitor,chip603		1 nF	21102
C402	Capacitor,chip603		10 nF	21103
C403	Capacitor,chip603		10 nF	21103
C404	Capacitor,chip603		1 nF	21102
C405	Capacitor,chip805	F	1 uF	20666
	Capacitor,chip805	G	1 uF	20666
C406	Capacitor,chip805	F	1 uF	20666
	Capacitor,chip805	G	1 uF	20666
C407	Capacitor,chip603	F	100 nF	21104
	Capacitor,chip603	G	100 nF	21104
C408	Capacitor,chip805	F	1 uF	20666
	Capacitor,chip805	G	1 uF	20666
C409	Capacitor,chip805	F	1 uF	20666
	Capacitor,chip805	G	1 uF	20666
C410	Capacitor,chip603		10 nF	21103
C411	Capacitor,chip603		10 nF	21103
C412	Capacitor,chip603		10 nF	21103
C413	Capacitor,chip402	F	100 pF	23101
	Capacitor,chip402	G	100 pF	23101
C414	Capacitor,chip402	F	100 pF	23101
	Capacitor,chip402	G	100 pF	23101
C415	Capacitor,chip402	F	100 pF	23101
	Capacitor,chip402	G	100 pF	23101
C416	Capacitor,chip402	F	100 pF	23101
	Capacitor,chip402	G	100 pF	23101
C417	Capacitor,chip402	F	100 pF	23101
	Capacitor,chip402	G	100 pF	23101
C418	Capacitor,chip402	F	100 pF	23101
	Capacitor,chip402	G	100 pF	23101
C419	Capacitor,chip402	F	100 pF	23101
	Capacitor,chip402	G	100 pF	23101
C420	Capacitor,chip402	F	100 pF	23101
	Capacitor,chip402	G	100 pF	23101
C421	Capacitor,chip402	F	100 pF	23101
	Capacitor,chip402	G	100 pF	23101
C430	Capacitor,chip603		150 pF	21151
X201	Crystal		4.032 MHz	31201
X301	Crystal		16 MHz	31205
T102	Transistor		DTC144EUA	40209
T103	Transistor		DTC144EUA	40209
T104	Transistor		BCW60D	40156
T105	Transistor	F	BC868-25	40188
	Transistor	G	BC868-25	40188
T106	Transistor		BC807	40186
T107	Transistor		DTC144EUA	40209
T201	Transistor		DTC144EUA	40209
T202	Transistor		DTC144EUA	40209
T203	Transistor	F	BCW60D	40156
T204	Transistor	F	BCW60D	40156
T401	Transistor		DTC144EUA	40209

Copyright © 2004

PARTLIST FOR Option board TRDX3001 DATE 11-10-02
DRAWING NO. 0-3009-03-4 UNIT NO. 3270

Component	Description		Value	Niros No.
T402	Transistor		BC807	40186
D401	Diode		BAT54S	45173
LED301	Light_diode	F	RED	45192
	Light_diode	G	RED	45192
IC102	Integrated_circuit		LP2951	46531
IC103	Integrated_circuit		LM4871	46544
IC104	Integrated_circuit		LM4871	46544
IC105	Integrated_circuit	F	LP2951	46531
	Integrated_circuit	G	LP2951	46531
IC106	Integrated_circuit		LMV324	46565
IC107	Integrated_circuit		ILC7081AIM5-33	46545
IC108	Integrated_circuit	F	LP2951	46531
	Integrated_circuit	G	LP2951	46531
IC109	Integrated_circuit		7805	46056
IC203	Integrated_circuit		FX829D2	46511
IC204	Integrated_circuit		74HC4053BT	46255
IC205	Integrated_circuit	F	ISD4004-10	46570
IC206	Integrated_circuit		LMV321	46571
IC301	Integrated_circuit	G	GPS-MS1	46341
IC304	Integrated_circuit	F	24E32	46518
IC305	Integrated_circuit		TC7SU04FU	46566
IC306	Integrated_circuit		EP1K30	46568
IC307	Integrated_circuit		U6803B-FP	46529
IC308	Integrated_circuit		U6803B-FP	46529
IC309	Integrated_circuit		U6803B-FP	46529
IC310	Integrated_circuit		U6803B-FP	46529
IC311	Integrated_circuit		U6803B-FP	46529
IC401	Integrated_circuit	F	MAX241EEWI	46509
	Integrated_circuit	G	MAX241EEWI	46509
L101	Coil,chip1206		75938	75938
L201	Coil,chip1206		75938	75938
L401	Coil,chip1206		75938	75938
L402	Coil,chip1206		75938	75938
FUSE101	Fuse	F	2.5AT	83392
JA1	Connector			83395
JB1	Connector			83395
JE1	Connector_25pol			83366
JE2	Connector_25pol			83366
JE3	Connector_25pol			83366

p. 8 of 9 PC. Board No. 797-3

Copyright © 2004

PARTLIST FOR Option board TRDX3001 DATE 11-10-02
DRAWING NO. 0-3009-03-4 UNIT NO. 3270

Component	Description	Value	Niros No.
V1	Resistor,chip1206 B	100 Ohm	12101
	Resistor,chip1206 G	220 Ohm	12221
V2	Resistor,chip1206 B	100 Ohm	12101
	Resistor,chip1206 G	220 Ohm	12221
	Pc._board_no. 797-3	1 pcs	95797
	Gnd_spring	1 pcs	98221

p. 9 of 9 PC. Board No. 797-3